AERMEC

air conditioning

R410A

INSTALLATION MANUAL

CHILLERS
REVERSIBLE HEAT PUMPS
CONDENSING UNITS

- EXTERNAL UNITS
- HIGH EFFICIENCY
- HOT WATER PRODUCTION UP TO 50 °C

ANL
ANL-H
020-202

EN

AERMEC COMPANY QUALITY SYSTEM ICIM ISO 9001:2008 - Cert. n° 0128 CISQ IQNet AERMEC S.P.A.

EUROVENT CERTIFIED PERFORMANCE www.eurovent-certification.com

Aermec
participates in the EUROVENT Programme: LCP.
The products of interest can be found on:
www.eurovent-certification.com

1608. 6755441_02

Standards applied in the DESIGN and MANUFACTURE of the unit:

SAFETY

1. Machinery directive 2006/42/CE
2. Low voltage directive LVD 2006/95/CE
3. Electromagnetic compatibility directive EMC 2004/108/CE
4. Pressure vessel directive PED 97/23/CE, EN 378,
5. UNI12735, UNI14276

ELECTRICAL

1. IEC EN 60335-2-40,
2. IEC EN 61000-6-1/2/3/4

ACOUSTICAL

1. ISO DIS 9614/2 (intensity method)

PROTECTIVE RATING

IP24

CERTIFICATION

EUROVENT
UNI EN 14511:2011

REFRIGERANT

This unit contains fluoride gases with greenhouse effect covered by the Kyoto Protocol. Maintenance and disposal must only be carried out by qualified staff, in accordance with local regulations

WARNING

1. The refrigerant circuit is under pressure. Additionally, high temperatures can be generated. The unit can only be worked on by a TAS technical assistance operative or a qualified technician. Interventions on the refrigerant circuit can only be carried out by a qualified refrigeration technician.

2. **GAS R410A**
   The units are delivered with their operating charges of refrigerant R410A. This is a refrigerant without chlorine which does not damage the ozone layer. R410A is not flammable. All maintenance procedures must be carried out by a qualified technician with the appropriate safety equipment.

3. **Danger of electrical shock!**
   Completely disconnect the unit from the power supply before starting procedures.

1. GENERAL INSTRUCTIONS FOR THE INSTALLER

The AERMEC ANL units are manufactured in accordance with recognised technical and safety standards. They are designed for air conditioning and production of domestic hot water (DHW) and must be used in a manner compatible with their performance characteristics. All contractual and extra-contractual liabilities causing damage to persons, animals or objects or through errors of installation, control or maintenance or from improper use are excluded by the Company. Any uses not expressly indicated in this manual are not permitted.

1.1. CONSERVATION OF DOCUMENTATION

1. Submit the manual with all supplementary documentation to the system user who will be responsible for the conservation of documents so that they can be available when needed.
2. Read this manual fully: all works must be carried out by qualified personnel, in accordance with any applicable current local regulations.
3. The unit must be installed in a manner to render possible maintenance and/or repair operations.
4. The equipment warranty does not cover any costs associated with lifting or access equipment necessary for warranty procedures.
5. Do not modify or tamper with the equipment as this could result in accidents for which the manufacturer will not be held responsible. The warranty will be voided if the above mentioned warnings are not respected.

1.2. SAFETY INSTRUCTIONS AND INSTALLATION STANDARDS

1. The equipment must be installed by a competent and qualified technician, in compliance with the applicable national legislation of the country of destination. AERMEC assumes no responsibility for any losses incurred by not observing these instructions.
2. Before commencing any works it is necessary to **CAREFULLY READ THE INSTRUCTIONS AND MINIMISE ANY RISKS BY TAKING APPROPRIATE SAFETY PRECAUTIONS**. All relevant personnel must be made aware of the procedures and possible risks that may arise at the time of installation of the unit.

2. SELECTION AND POSITION OF INSTALLATION

Before proceeding with the installation of the equipment agree the location with the client, taking into account the following points:

1. The base must be able to support the weight of the unit.
2. The safe distances between the unit and other equipment or structures must be strictly respected to ensure the intake and outlet air is free to circulate.
3. The equipment must be installed by a competent and qualified technician, in compliance with the applicable national legislation of the country of destination, respecting the required minimum maintenance access spaces.

2.2.1. POSITIONING

Before lifting the unit verify the lifting capability of the equipment being used, taking into account the information provided with the packaging.
To move units (ANL 020-090) over horizontal planes use forklifts or similar in the most appropriate manner taking into account the weight distribution of the unit.
When lifting (ANL 102-202) insert through the unit's base holes lifting bars (NOT PROVIDED) of sufficient length to locate the lifting chains and safety lugs.
Position the unit in the place indicated by the client, inserting between the unit's base and the base support a rubber pad (minimum 10 mm thick) or feet anti-vibration mounts (ACCESSORY). For further information refer to the dimensional tables.
Secure the unit and ensure it is level; check that sufficient access is provided for hydraulic and electrical connections.
In the case of installation where gusts of wind may occur adequately secure the unit using appropriate ties.
Ensure the installation of the condensate drain tray on units that require it (as ACCESSORY).

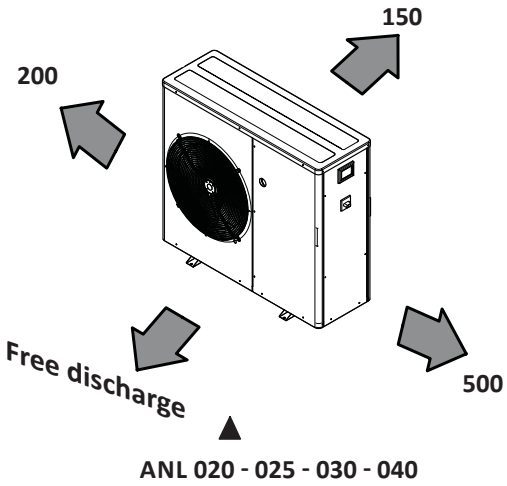

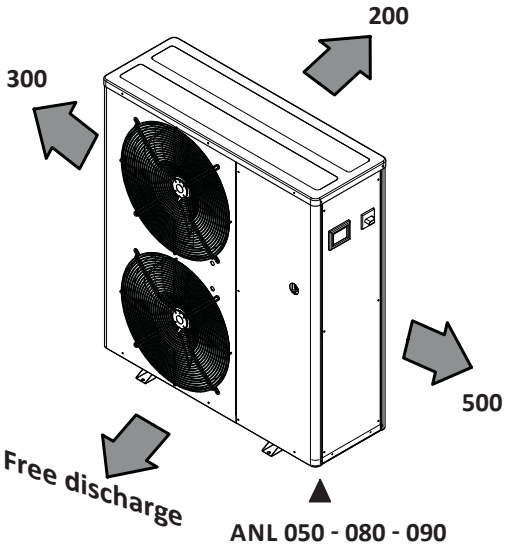

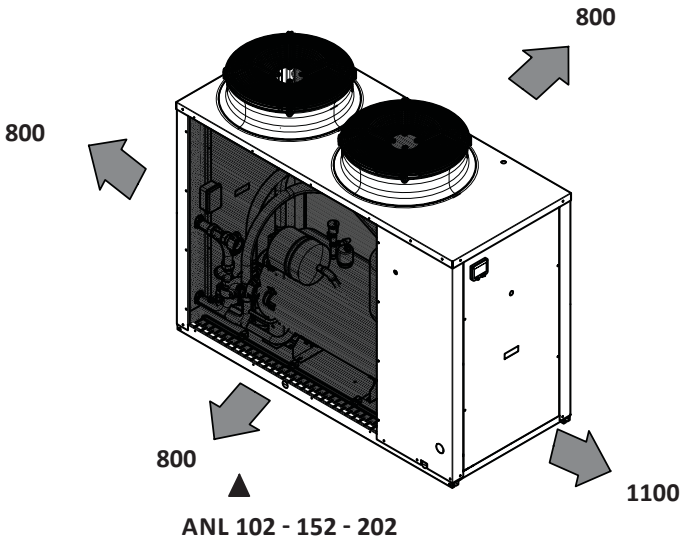

4.4. SYSTEM EXAMPLE FOR DHW PRODUCTION WITH ANL50H° WITH ACCESSORY VMF-ACS

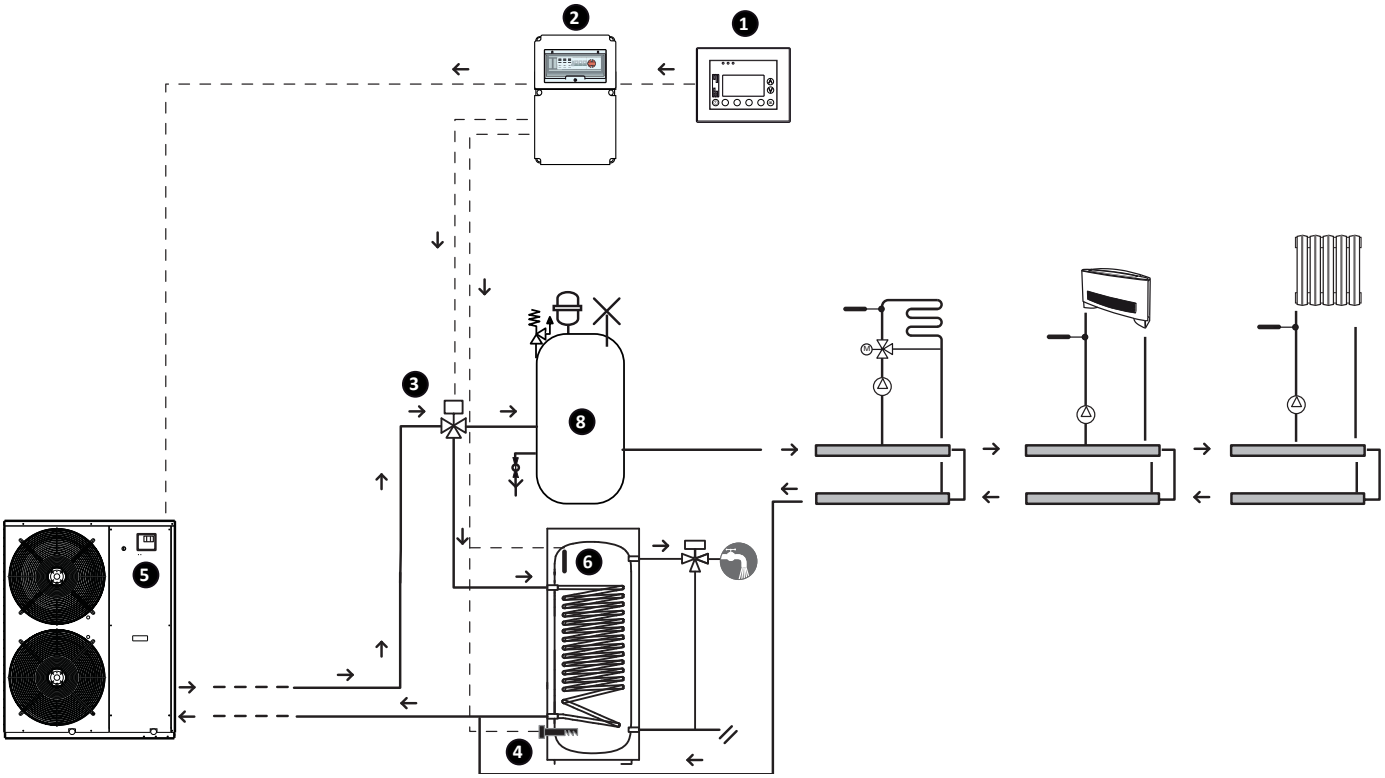

	ANL050H°
	VMF SYSTEM for the CONTROL AND PRODUCTIONS OF DHW **(ACCESSORIES)** [9]
1	E5 (white or black)
2	VMF-ACS3KTN | 6KTN |8KTN Control of: - 3 way valve - Sensor DHW storage tank - Immersion heater DHW storage tank (for integration and anti-legionella cycle)
3	3 way valve (not supplied)
4	Immersion heater DHW storage tank (not supplied) (for integration and anti-legionella cycle)
5	Interface board RS485 **(ACCESSORY MODU-485A)** [10]
6	DHW storage tank (not supplied)
8	System buffer tank (not supplied)

9 For further information refer to the specific VMF system documentation available on the website:
www.aermec.com

10 Accessory required for the unit to communicate with the VMF system

WARNING
Confirm the hydraulic integrity of the joints.

WARNING
It is recommended to repeat this procedure after the unit has operated for a few hours and to periodically check the system pressure. Charging to be done with unit off (pump OFF).

4.5. SYSTEM CHARGING

Before commencing the charging procedure position the main isolator of the unit in the OFF position.

1. Ensure that the system drain valve is closed
2. Open all the system air vents and of the terminal units
3. Open the system isolating valves
4. Start filling slowly opening the system water charging valve external to the unit
5. When water exits the terminal units air vents close them and continue charging until the required system operating pressure is reached.

4.6. SYSTEM DRAINING

1. Before commencing draining the draining procedure position the main isolator of the unit in the OFF position
2. Ensure the system water charging valve is closed
3. Open the system drain valve external to the unit and all the system air vents and of the terminal units.

5. ELECTRICAL CONNECTIONS

The ANL units are fully factory wired and only require connection to the power supply network, downstream of an isolator, in accordance with the applicable wiring standards of the country of installation.
It is recommended to check the following items:

1. The electrical network is capable of meeting the electrical input data shown in the table below.
2. The unit is only powered up on completion of any hydraulic and electrical works.
3. Comply with the indicated phasing and earth requirements.
4. The power supply cable must have the appropriate protection against short circuits, residual current and earth leakage with suitable isolation from other devices.
5. The tolerance on the power supply voltage is ±10% of the nominal voltage rating of the unit (for three phase units a maximum imbalance of 3% between phases is permitted). If these values are not met please contact the power supply company.
6. For the electrical connections use double insulated cables in accordance with applicable wiring standards.

MANDATORY REQUIREMENTS

1. A magneto-thermal circuit breaker conforming to IEC-EN standards (contact aperture minimum 3 mm) is required, with adequate protection in accordance with the data provided in the following table, to be installed as close as possible to the unit.
2. An effective earth connection is required. The manufacturer cannot be held responsible for any damages caused by lack of, or inadequate, earthing of the unit.
3. For three phase units check the correct cable phasing.

The cable cross sections shown in the following cable are the recommended values based on a maximum 50 m cable length.

All electrical works must be carried out by PERSONNEL WITH THE APPROPRIATE LEGAL QUALIFICATIONS, trained and aware of the risks relating to such works.
The design of the cabling and related components must be carried out by PERSONNEL WITH APPROPRIATE QUALIFICATIONS TO DESIGN ELECTRICAL INSTALLATIONS, following international and national standards of the location the unit is installed, in accordance with current legal requirements.

For installation details refer to the electrical wiring schematics supplied with the unit. The electrical wiring schematic together with the manuals must be conserved with care and MADE AVAILABLE FOR FUTURE REFERENCE.

The weatherproof seals of the equipment must be checked before making electrical connections and the unit most only be powered on completion of all electrical and hydraulic works.

For longer cable lengths or different types of cable installations, the DESIGNER is responsible for correctly sizing the isolator, circuit breaker, earthing protection and cable sizes, based on:

- Length
- Type of cable
- Electrical input of the unit, distance and operating ambients.

WARNING
Using the water piping to earth the unit is not permitted.

WARNING
Verify that all terminals are tight on power carrying conductors before first start-up and 30 days after putting into service. Afterwards check twice yearly.
Loose terminals can result in overheating of cables and components..

8. CHECKS AND FIRST START-UP

WARNING
Before carrying out the following checks ensure the unit is disconnected from the power supply. Ensure that the main isolator is in the OFF position and locked in that position with appropriate warning label attached. Before starting the procedures check for the absence of voltage with a voltmeter or phase checker.

8.1. PREPARING FOR FIRST START-UP

It is reminded that for units of this series, if requested by the Aermec client or the legal owner and only on ITALIAN territory, free start-up is provided by the regional Aermec technical assistance service. The start-up must be previously agreed based on the intended time of completion of installation. Before the start-up all the works (electrical and hydraulic connections, filling and venting of air in the system) must be completed.

8.2. START-UP

8.2.1. PRELIMINARY CHECKS BEFORE POWERING UP

Check:
1. All safety precautions have been followed.
2. The unit has been appropriately fixed to the support base.
3. Minimum clearance spaces have been observed.
4. Power supply cables are correctly sized and capable of supporting the electrical requirements of the unit (see section on electrical data) and that the unit is correctly earthed.
5. All electrical connections are correctly terminated and tightened.

8.2.2. CHECKS TO BE DONE WHEN POWERED UP

1. Apply power to the unit by turning the main isolator to the ON position. The display will power up after several seconds after applying power, check that the operating status is on OFF (OFF BY KEYB on the lower part of the display).
2. Check with a tester that the power supply voltages on the phases U-V-W are 400V ±10%, check that the phase imbalance is not greater than 3%.
3. Check that the connections made by the installer comply with the documentation.
4. Check that the compressor crankcase heater(s) are operating by measuring the increase of oil sump temperature. The heater(s) must be in operation for at least 12 hours before starting the compressor, and in all cases the sump oil temperature must be 10-15 K above ambient temperature.

HYDRAULIC CIRCUIT

1. Check that all hydraulic connections have been correctly installed, that the instructions on the labels have been followed, and that a mechanical filter has been installed on the inlet to the evaporator. (Mandatory component otherwise the warranty will be voided).
2. Confirm that the pump(s) are operating and that the flow rate is sufficient to make the contact on the flow switch.
3. Check the water flow rate by measuring the differential pressure across the evaporator inlet and outlet and calculating the flow from the evaporator pressure drop diagram provided in the documentation.
4. Check the correct functioning of any flow switch installed; close the isolating valve on the evaporator outlet and observe the result on the unit display panel; open the valve and reset the flow trip alarm.

8.3. FIRST START-UP

After having rigorously followed the above checks it is possible to start the unit:
1. Close the electrical panel.
2. Turn the main isolator to ON.
3. Press the key ON ⏻ for 3 seconds to start the unit.
   Pressing the key ON ⏻ displays the water temperature and the operating mode of the unit. Check the operating setpoint parameters and reset any alarms present . After a few minutes the unit will start.

8.3.1. CHECKS WITH THE UNIT RUNNING

REFRIGERANT CIRCUIT
CHECK:
- That the compressor input current of the compressors is less than that indicated in the table of electrical data.
- That in three phase models the compressor noise is not abnormal, indicating a reverse rotation. In this case reverse one of the phases.
- That the voltage values are within the determined limits and that the phase imbalance (three phase power) is less than 3%.
- Presence of any refrigerant leaks, in particular from connections to gauges, pressure transducers and pressostats. (Vibrations during transportation may have loosened connections).
- Superheat
  Compare the compressor suction temperature with a contact temperature sensor reading with the temperature of the low pressure gauge (saturated suction temperature corresponding to the evaporating pressure). The difference between these two temperatures is the superheat value. The optimal values are between 4 and 8 K.
- Discharge temperature
  If the values of sub-cooling and superheat are normal the temperature measured in the discharge line from the compressor must be 30/40 K above the condensing temperature.

SAFETY AND CONTROL DEVICES
CHECK:
- The manual high pressure pressostat, which stops the compressor and generates and alarm when the discharge pressure exceeds the preset value. The correct operation is checked by closing the refrigerant isolating valve to the heat exchanger (in cooling mode) and keeping a check on the high pressure gauge, verify the operation corresponds to the rated value. Warning: in the event the pressostat does not operate at the rated value immediately stop the compressor and investigate the cause. Reset is manual but can only be done when the pressure drops below the differential setting. (For the values of the trip and differential setting refer to the technical manual).

- Anti-freeze protection
  The electronic control of the anti-freeze protection is from the water temperature sensor leaving the evaporator prevents freezing of water when the temperature is too low. The operation of the anti-freeze protection can be checked by increasing the setpoint value until it is above the temperature of leaving water and checking the water temperature with a high precision sensor. Confirm that the unit stops and generates the responding alarm. After this check reset the anti-freeze setpoint to the original value.

8.4. CHANGE OF SEASON

8.5. CHANGE OF SEASON FROM UNIT CIRCUIT BOARD

Access the **USER SET** menu with the key 🔧 and confirm the password 000 pressing key 🔧. Using the arrow key ▲▼ display the parameter **STA** index 0 of the menu and select pressing the key 🔧. Using the arrow keys ▲▼ select the value for either: **VALUE 0** cooling mode operation, or, **VALUE 1** heating mode operation. Confirm the selection pressing key 🔧 and exit the menu with the key ▶.

8.6. CHANGE OF SEASON FROM PR3 REMOTE PANEL (ACCESSORY)

If the PR3 remote panel (accessory) is installed it must be enabled after making the electrical connections.

8.6.1. REMOTE PANEL ENABLING

Access the **INSTALLER SET** menu with the key 🔧 and insert the menu access password: **password installer 030.** Using the arrow keys ▲▼ display the parameter **PAN** index 9 of the menu and select pressing the key 🔧. Using the arrow keys ▲▼ select from the desired values of:
VALUE 1:
- **SEASON CHANGE** from the unit circuit board
- **ON/OFF CONTROL** from the PR3

VALUE 2:
- **SEASON CHANGE** controlled from the PR3
- **ON/OFF CONTROL** from the unit

VALUE 3:

- **SEASON CHANGE** controlled from the PR3
- **ON/OFF CONTROL** from the PR3

Confirm the selection pressing key and exit the menu with the key

Once the PR3 remote panel is enabled the change of season selection can be made directly from the switch **(fig.1)**. The unit will automatically switch on and off with the selected operating mode.

For further information refer to the USER manual.

(fig.1)

9. OPERATING CHARACTERISTICS

9.1. COOLING SETPOINT

(Factory default) = 7°C, Δt = 5 K.

9.2. HEATING SETPOINT

(Factory default) = 45°C, Δt = 5 K.

In the event of a momentary power interruption the selected operating mode will be retained in memory.

9.3. COMPRESSOR DELAY TIMERS

To avoid excessive compressor starts two functions are provided:

- Minimum time from last stop 60 seconds in cooling mode.
- Minimum time from last start 300 seconds in heating mode.

9.4. CIRCULATING PUMPS

The wiring schematic provides outputs to control the circulating pumps. The system side pump starts immediately and after 30 seconds of operation, when the water flow is stabilised, the pressure differential/ flow switch control function is enabled. If no alarms are present the unit will start.

9.5. ANTI-FREEZE ALARM

The alarm [11] is always active even in standby mode. To prevent damage to the plate heat exchanger by freezing of the water within the unit is stopped and an alarm raised if the water temperature drops below the minimum anti-freeze setpoint of 3°C. The unit can only re-start after a manual reset and if the anti-freeze sensor reads a water temperature above 4°C [12]. With the unit in off mode and with a water temperature below 4°C the factory standard fitted electric heaters on the heat exchanger are turned on, and turned off when the water temperature exceeds 5°C. The water pump always remains active.

9.6. WATER FLOW ALARM

The unit has a low water flow rate alarm using a factory fitted differential pressure switch or flow switch. This safety activates after the first 30 seconds of pump operation if the water flow rate is not sufficient. The operation of this alarm stops the compressors and the pump.

WARNING

[11] The anti-freeze setpoint can only be adjusted by an authorised service centre and only after verifying that the hydraulic circuit has the correct % of anti-freeze solution.

[12] If this alarm occurs immediately call the authorised technical service assistance.

WARNING

FOR 230V/1/50Hz UNITS:

The unit is provided with a compressor soft starter. This device contains capacitors that could overheat through repeated quick starts. If power supply is removed wait at least 3 minutes before powering up.

WARNING
For 230V/1/50Hz units with soft-start, if power is removed for reasons of fault or maintenance, it is required to wait 5 minutes before re-applying power to the unit to ensure proper operation.

WARNING
We recommend a service log book is provided for the unit (responsibility of the user) to keep records of any works on the unit, which will aid maintenance and repair works. Note in the service log book date, type of works (routine maintenance, inspection or repair), describing the event and the measures taken.

WARNING
It is **FORBIDDEN** to charge with refrigerant circuit with a refrigerant type different to that indicated. Using a different refrigerant can cause serious damage to the unit.

10. ROUTINE MAINTENANCE

It is forbidden to carry out any cleaning operation before isolating from the power supply [1].
Confirm no voltage is present before commencing works.
Periodic maintenance is a fundamental requirement to ensure efficient unit operation both in terms of operation and energy efficiency.

The fundamental required annual checks are:

10.1. HYDRAULIC CIRCUIT

CHECK:
1. Water circuit is filled.
2. Water filter is clean.
3. Operation of the differential pressure or flow switch.
4. Absence of air in the system (vent).
5. Water flow rate is always constant through the evaporator.
6. Condition of the hydraulic piping insulation.
7. The percentage of anti-freeze liquid, as may be required.

10.2. ELECTRIC CIRCUIT

CHECK:
1. Operation of safeties.
2. Power supply voltage.
3. Electrical power input.
4. Tightness of connections and terminals.
5. Operation of the compressor crankcase heater.

10.3. REFRIGERANT CIRCUIT

CHECK:
1. State of compressors.
2. Efficiency of the plate heat exchanger.
3. Operating pressures.
4. Leaks to confirm the correct operating refrigerant charge.
5. Operation of the high and low pressure pressostats
6. Efficient operation of the filter drier.

10.4. MECHANICAL CHECKS

CHECK:
1. **Tightness of screws,** of compressors and electrical panel and external panelling of the unit. Poor fixings cause noise and abnormal vibrations.
2. The state of the unit structure.
   Treat any parts showing signs of corrosion with the appropriate paints to reduce or eliminate rust.

11. SPECIAL MAINTENANCE

The ANL units are factory charged with R410A and tested. In normal operation they therefore do not require any intervention from the technical assistance service in relation to the refrigerant charge. Over time some small leaks can appear, resulting in refrigerant discharges of the circuit and causing a malfunction of the unit. In this case the leaks have to be found and repaired and the unit recharged in accordance, and as required, under current legislation and good working practices.

12. DISPOSAL

Ensure that the disposal of the unit is carried out in accordance with the current legal requirements.

13. PROCEDURE FOR SELECTION OF SYSTEM TYPE

Several parameters of the MODU CONTROL board have to be set, based on the type of system the unit is installed.
These changes of parameters are summarised in the table below to permit the installer to make the appropriate selections of the unit's electronic circuit board.

13.1. HOW TO MODIFY A USER MENU PARAMETER

To access the **USER** setting press the key and confirm the password 000 pressing the key . The display will show the parameters of the **USER** index as three identifying characters; the index remains displayed for a second and then is replaced by the value of the parameter it relates to.
To move to the following parameter use the arrow keys . To modify a parameter press the key , modify the value using the arrow keys and confirm the modification pressing the key . To exit the menu press the key .

13.2. HOW TO MODIFY AN INSTALLER MENU PARAMETER

To enter and modify the **INSTALLER** menu follow the same procedure as the USER menu above.

Password INSTALLER menu: 030

QUESTION	ANSWER	WHAT TO DO
(1) What type of terminals are installed in the heating circuit?	• The unit is a cooling only model	• Go to question 2
	• Radiant panels	• Enter in parameter **StC** (index 3 menu USER) with the value of 35 °C
	• Fan coil units or low temperature radiators	• Enter in parameter **StC** (index 3 menu USER) with the value of 45 °C (default value)
	• Other applications	• Enter in parameter **StC** (index 3 menu USER) with the value of 55 °C
(2) Is the remote control accessory panel installed (PR3)?	• Not installed	• Go to question 3
	• Installed	• Enter in parameter **PAN** (index 9 menu INSTALLER) with the appropriate value: **Value (1):** • Season selection controlled from the unit circuit board • ON/OFF control from the PR3 **Value (2):** • Season selection controlled from the PR3 • ON/OFF control from the unit circuit board **Value (3):** • Season selection controlled from the PR3 • ON/OFF control from the PR3
(3) Is domestic hot water production present?	• Not present	• Go to question 5
	• Present	• Enter in parameter **ASA** (menu INSTALLER) with the value (1)
(4) In the domestic hot water circuit is a three way diverting valve present?	• Not present	• Go to question 5
	• Present	• Enter in parameter **AAS** (index C menu INSTALLER) with the appropriate value (in seconds): this parameter shows the reversing time for the three way diverting valve in the circuit for the production of domestic hot water
(5) Is an ambient thermostat present?	• Not present	• No function
	• Present	• This parameter enables a digital contact **ID** (shown on the electrical schematic with the reference **TRA**) onto which to connect an ambient thermostat with which to disable the compressors and electric heaters. Enter in parameter **trA (index D menu INSTALLER)**, with the appropriate value selecting from: **1. Value (1 or 2): ENABLED** **2. Value (0 or 3): DISABLED** **3. It is reminded that the OPEN state of the contact represents:** • stops compressors and heaters if the parameter value is set to 1 • stops compressors, pump and heaters if the parameter value is set to 2 • pump alarm (as in the previous software version), if the parameter value is set to 3

WARNING
For more information refer to the **USER manual** provided with the unit and available on the website **www.aermec.com**