Fire dampers
Type FK-EU

FK-EU with fusible link
for 72 °C or 95 °C

CE compliant according
to European regulations

With TROXNETCOM
as an option

ATEX certification

Tested to VDI 6022

For diverse applications

Rectangular fire damper for the isolation of duct penetrations between fire compartments, for a variety of installation situations, available in many different sizes and constructions

- Nominal sizes 200 × 200 – 1500 × 800 mm, in increments of 1 mm
- Low differential pressure and sound power level
- Explosion-proof construction (ATEX) as an option
- Air transfer damper as an option
- Optional stainless steel casing or powder-coated casing for increased corrosion protection
- Integration into the central BMS with TROXNETCOM
- Universal installation options

Optional equipment and accessories

- Electric actuator 24 V/230 V
- Release temperature 72/95 °C
- Duct smoke detector RM-O-3-D

1

Type		Page
FK-EU	General information	1.1 – 2
	Correct use	1.1 – 10
	Order code	1.1 – 15
	Installation kit – installation in solid walls	1.1 – 16
	Installation kit – installation with flexible ceiling joint	1.1 – 18
	Installation kit – for installation on the face of solid walls	1.1 – 19
	Installation kit – for installation adjacent to solid walls	1.1 – 20
	Installation kit – for installation remote from solid walls	1.1 – 21
	Installation kit – for installation in lightweight partition walls/fire walls	1.1 – 23
	Cover grille	1.1 – 25
	Circular spigot	1.1 – 27
	Flexible connector	1.1 – 29
	Extension piece	1.1 – 31
	Limit switch	1.1 – 33
	Spring return actuator	1.1 – 34
	Air transfer damper	1.1 – 35
	TROXNETCOM	1.1 – 36
	Duct smoke detectors	1.1 – 37
	Quick sizing	1.1 – 38
	Free area, resistance coefficient and correction values	1.1 – 40
	Dimensions and weight – FK-EU	1.1 – 42
	Dimensions and weight – FK-EU/.../Z4*	1.1 – 43
	Dimensions and weight – FK-EU/.../ZEX*	1.1 – 44
	Dimensions and weight – FK-EU/.../Z**RM	1.1 – 45
	Dimensions – Duct connection	1.1 – 46
	Specification text	1.1 – 47
	Basic information and nomenclature	1.3 – 1

Variants

Product examples

FK-EU with fusible link

FK-EU with spring return actuator

FK-EU with spring return actuator (explosion-proof)

FK-EU as air transfer damper

1

Description

Fire damper Type FK-EU

For detailed information on attachments see Chapter K4 – 1.2.

Application

- TROX fire dampers of Type FK-EU, with CE marking and declaration of performance, for the isolation of duct penetrations between fire compartments in the event of a fire
- To prevent the propagation of fire and smoke through ductwork to adjacent designated fire compartments

Classification

- Class of performance to EN 13501-3, up to EI 180 (v_e, h_o, i ↔ o) S

Variants

- With fusible link
- With fusible link for use in potentially explosive atmospheres
- With spring return actuator
- With spring return actuator for use in potentially explosive atmospheres
- With spring return actuator and duct smoke detector
- With spring return actuator, duct smoke detector and cover grilles on both ends for use as an air transfer damper, with general building inspectorate licence Z-6.50-2031

Nominal sizes

- B × H: 200 × 200 – 1500 × 800 mm (in increments of 1 mm))
- L: 375 mm or 500 mm

Attachments

- Limit switch for damper blade position indication
- Limit switch for damper blade position indication for use in potentially explosive atmospheres
- Spring return actuator for 24 V AC/DC or 230 V AC supply voltage
- Spring return actuator for 24 – 230 V supply voltage, for use in potentially explosive atmospheres
- Network module for the integration with AS-i or LON networks
- Spring return actuator and pre-wired duct smoke detector, 24 V or 230 V supply voltage

Accessories

- Installation subframe and installation kit for dry mortarless installation in solid walls
- Installation kit for installation into solid non-load-bearing walls with flexible ceiling joint
- Installation kit for dry mortarless installation on the face of solid walls
- Installation kit for dry mortarless installation adjacent to solid walls
- Installation kit for dry mortarless installation remote from solid walls and ceiling slabs
- Installation kit for dry mortarless installation in lightweight partition walls/fire walls with metal support structure and cladding on both sides
- Installation kit for dry mortarless installation into shaft walls with or without metal support structure but with cladding on one side
- Installation kit for installation into lightweight partition walls with flexible ceiling joint
- Flexible connectors
- Cover grille
- Circular spigots

Useful additions

- Duct smoke detector RM-O-3-D
- Duct smoke detector with airflow monitor RM-O-VS-D

Special characteristics

- Declaration of performance according to Construction Products Regulation
- Classification to EN 13501-3, up to EI 180 (v_e, h_o, i ↔ o) S
- Building inspectorate licence Z-56.4212-991 for fire resistance properties
- Complies with the requirements of EN 15650
- Tested to EN 1366-2 for fire resistance properties
- Hygiene complies with VDI 6022 part 1 (07/2011), VDI 3803 (10/2002), DIN 1946 part 4 (12/2008), and EN 13779 (09/2007)
- Corrosion protection according to EN 15650 in connection with EN 60068-2-52
- Closed blade air leakage to EN 1751, class 2
- Casing air leakage to EN 1751, class C; (B + H) ≤ 700, class B
- Low differential pressure and sound power level
- Any airflow direction
- Integration into the central BMS with TROXNETCOM

Parts and characteristics

- Fire dampers with casing length L = 500 mm only for installation: with installation subframe and installation kit; with installation kit for lightweight partition walls; adjacent to solid walls and remote from solid walls
- Release temperature 72 °C or 95 °C (for use in warm air ventilation systems)
- Single-handed operation

Construction features
- Rectangular or square construction, rigid casing, both flanges with fixing holes
- Suitable for the connection of ducts, spigots, flexible connectors or a cover grille
- The release mechanism is accessible and can be tested from the outside
- Two inspection access panels
- Remote control with spring return actuator

Materials and surfaces
Casing:
- Galvanised sheet steel
- Galvanised sheet steel, powder-coated RAL 7001
- Stainless steel 1.4301

Damper blade:
- Special insulation material
- Special insulation material with coating

Other components:
- Damper blade shafts and driving linkage made of stainless steel
- Brass or stainless steel bearings
- Seals of polyurethane or elastomer

The construction variants with stainless steel or powder-coated casing meet even more critical requirements for corrosion protection. Detailed listing on request.

Installation and commissioning
Installion is to be carried out according to the operating and installation manual

Mortar-based installation:
- In solid walls and ceiling slabs
- In non-load-bearing solid walls with flexible ceiling joint: with installation kit GM
- In lightweight partition walls and fire walls with metal support structure and cladding on both sides

Dry mortarless installation:
- In solid walls: with installation kit and installation subframe E1/E2
- In lightweight partition walls and fire walls with metal support structure and cladding on both sides: with installation kit ES
- In lightweight partition walls with metal support structure, cladding on both sides and flexible ceiling joint: with installation kit GL100
- In shaft walls with or without metal support structure and cladding on one side: with installation kit ES
- On the face of solid walls: with installation kit WA or WA short
- Adjacent to solid walls: with installation kit WV
- Remote from solid walls: with installation kit WE
- Remote from solid ceiling slabs: with installation kit WE (in horizontal duct)

Standards and guidelines
- Construction Products Regulation
- EN 15650:2010 – Ventilation for buildings – Fire dampers
- EN 1366-2:1999 Fire resistance tests for service installations – Fire dampers
- EN 13501-3:2010 Fire classification of construction products and building elements
- EN 1751:1999 Ventilation for buildings – Air terminal devices

Maintenance
- The functional reliability of the fire damper must be tested at least every six months; this has to be arranged by the owner of the ventilation system; functional tests must be carried out in compliance with the basic maintenance principles stated in EN 13306 and DIN 31051. If two consecutive tests, one 6 months after the other, are successful, the next test can be conducted one year later.
- A functional test involves closing the damper blade and opening it again; with a spring return actuator this can be done via remote control
- Fire dampers must be included in the regular cleaning schedule of the ventilation system.
- For details on maintenance and inspection, refer to the installation and operating manual

Technical data

Nominal sizes	200 × 200 to 1500 × 800 mm
Casing lengths	375 and 500 mm
Volume flow rate range	Up to 14400 l/s or up to 51840 m^3/h
Differential pressure range	Up to 2000 Pa
Operating temperature	At least 0 – 50 °C **
Release temperature	72 °C or 95 °C (for warm air ventilation systems)
Upstream velocity*	≤ 8 m/s with standard construction; ≤ 12 m/s with spring return actuator

Note: Upstream velocity for the explosion-proof actuator ExMax/RedMax-15-BF TR is ≤ 10 m/s
*** Data applies to uniform upstream and downstream conditions for the fire damper**
**** Temperatures may differ for units with attachments**

1

Function

Construction with fusible link

Functional description

In the event of a fire, fire dampers shut automatically to prevent the propagation of fire and smoke through ductwork to adjacent designated fire compartments. In the event of a fire, the damper is triggered at 72 °C or at 95 °C (use in warm air ventilation systems) by a fusible link. The release mechanism is accessible and can be tested from the outside.

Schematic illustration of FK-EU with fusible link

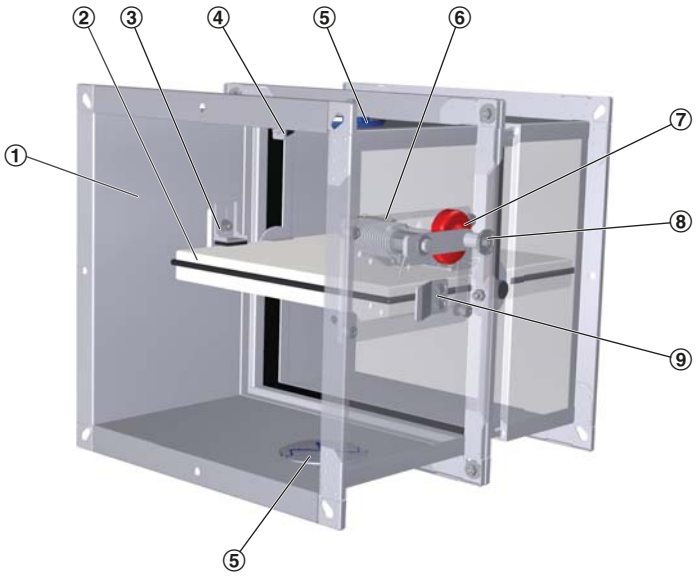

① Casing
② Damper blade
③ Travel stop for OPEN position
④ Travel stop for CLOSED position
⑤ Inspection access
⑥ Fusible link
⑦ Release mechanism
⑧ Handle interlock
⑨ Interlock

Function

Construction
with spring return actuator

Functional description

The spring return actuator enables the motorised opening and closing of the damper blade; it can be activated by the central BMS.
In the event of a fire, the damper is triggered thermoelectrically at 72 °C or 95 °C (use in warm air ventilation systems).
As long as power is supplied to the actuator, the damper blade remains open. If the supply voltage fails, the damper closes (power off to close). Motorised fire dampers can be used to shut off ducts. The torque of each actuator is sufficient to open and close the damper blade even while the fan is running. The spring return actuator is fitted with limit switches that can be used for capturing the damper blade position.

Schematic illustration of FK-EU with spring return actuator

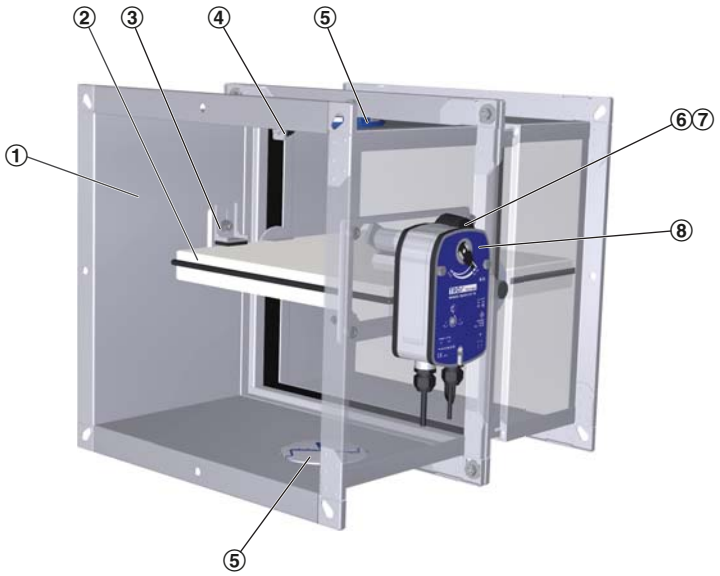

① Casing
② Damper blade
③ Travel stop for OPEN position
④ Travel stop for CLOSED position
⑤ Inspection access
⑥ Temperature sensor
⑦ Thermoelectric release mechanism
⑧ Spring return actuator BLF/BF

1

Function

Construction
with spring return
actuator, explosion-proof

Functional description

The fire damper is used as a shut-off device to prevent fire and smoke from spreading through ducting in areas with potentially explosive atmospheres. The fire damper is suitable for supply air and extract air systems in potentially explosive atmospheres. For the operation of the fire damper, the operating and installation manual and the technical data in the additional operating manual must be observed.

Use in areas with potentially explosive atmospheres (ATEX)

According to declaration of conformity TÜV 11 ATEX 085420 X, the fire damper may be used in the following areas with potentially explosive atmospheres. The ambient temperatures and types of release and actuation specified in the technical data must be observed.

RedMax:
- Zone 2: Gases, mists and vapours
- Zone 22: Dusts

ExMax:
- Zones 1, 2: Gases, mists and vapours
- Zones 21, 22: Dusts

ATEX certification

Release mechanism	Type of actuation	Marking	Ambient temperature	Maximum airflow velocity
ExPro-TT	ExMax-15-BF TR	II 2D c T80 °C II 2G c IIC T6	–40 to 40 °C	10 m/s
	RedMax-15-BF TR	II 3D c T80 °C II 3G c IIC T6	–40 to 40 °C	10 m/s

Schematic illustration of FK-EU with spring return actuator, explosion-proof construction (e.g. ExMax-15-BF TR)

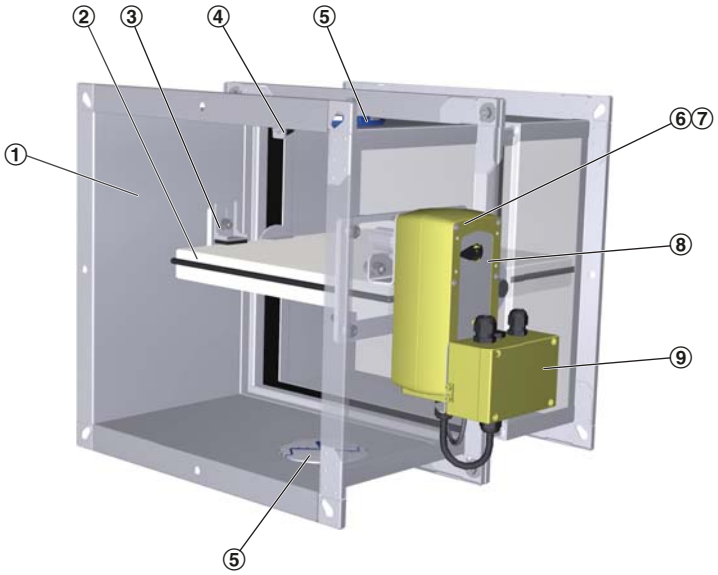

① Casing
② Damper blade
③ Travel stop for OPEN position
④ Travel stop for CLOSED position
⑤ Inspection access
⑥ Temperature sensor
⑦ Thermoelectric release mechanism
⑧ Spring return actuator ExMax
⑨ Terminal box ExBox

Function

Air transfer damper

Functional description

Air transfer dampers are designed to shut off openings for air transfer in fire resistant internal walls and ceiling slabs. To prevent smoke from spreading in buildings, it is extremely important that the smoke is detected at an early stage. Duct smoke detector Type RM-O-3-D is required to control and trigger the air transfer damper. The smoke detector operates on the principle of light scattering and detects the smoke regardless of its temperature so that the fire dampers can be closed before the release temperature is reached. The thermoelectric release mechanism of the spring return actuator also triggers the closure of the damper blade. When the release temperature (72 °C) is reached, the temperature sensor in the airflow interrupts the supply voltage to the spring return actuator. The spring return in the actuator causes the fire damper to close (power off to close).
A second temperature sensor monitors the ambient temperature. If the supply voltage fails, the damper closes. Air transfer dampers consist of an FK-EU fire damper, an RM-O-3-D duct smoke detector with general building inspectorate licence Z-78.6-125,
a spring return actuator (24 V AC/DC or 230 V AC) with two integral limit switches,
and cover grilles on both ends.

Special characteristics

- Easy electrical connection
- Integration into the central BMS with TROXNETCOM
- General building inspectorate licence: Z-6.50-2031

For further and up-to-date information, including the general building inspectorate licence and the operating and installation manual, please refer to our website. For a more detailed selection and design of our fire dampers please refer to the Easy Product Finder design programme on our website.

Schematic illustration of FK-EU as air transfer damper

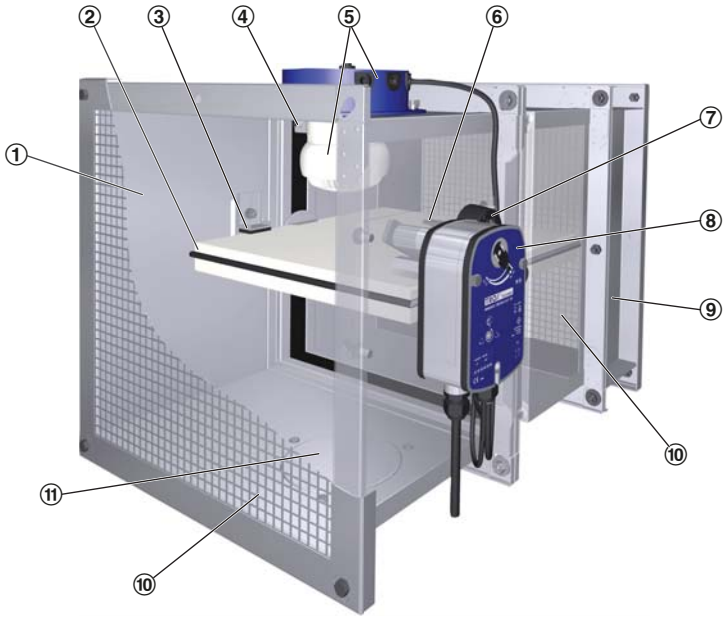

① Casing
② Damper blade
③ Travel stop for OPEN position
④ Travel stop for CLOSED position
⑤ Duct smoke detector RM-O-3-D
⑥ Temperature sensor
⑦ Thermoelectric release mechanism
⑧ Spring return actuator BLF/BF
⑨ Extension piece
⑩ Cover grille
⑪ Inspection access

1

Design information

- Approved only for use in ventilation and air conditioning sytems
- A class of performance up to EI 120 (v_e, h_o, i ↔ o) S can only be achieved with ducts connected on both ends, or with a duct on one end and a cover grille on the other end.
- If the fire damper is installed in a solid wall, solid ceiling slab, lightweight partition wall or shaft wall with a lower fire resistance class than that of the fire damper, the fire resistance class of the wall or ceiling slab applies also to the FK-EU (details upon request)
- Ducting must be installed in such a manner that it does not impose any significant loads on the fire damper in the event of a fire.
- For particular applications it is recommended that flexible connectors are used to connect rigid ducting to the unit.
- Fire dampers must be installed, connected and secured according to the operating and installation manual.

Incorrect use

Never use the fire damper:

- without specially approved attachments in areas with potentially explosive atmospheres
- as a smoke control damper
- outdoors without sufficient protection against the effects of weather
- in atmospheres where chemical reactions, whether planned or unplanned, may cause damage to the fire damper or lead to corrosion

Correct use in solid walls

Installation location		Construction and building material	Minimum thickness	Performance class	Mortar-based installation		Dry mortarless installation	
					Casing length [mm]			
			mm	EI TT (v_e–h_o, i ↔ o) S	L = 375	L = 500	L = 375	L = 500
In solid walls		Solid walls, gross density ≥ 500 kg/m³	100	EI 90 S	N	N	–	E
		Solid walls, gross density ≥ 500 kg/m³	100	EI 120 S	–	–	–	W
		Solid walls, gross density ≥ 500 kg/m³	100	EI 90 S	–	–	W	W
In non-load-bearing solid walls with flexible ceiling joint and installation kit GM		Solid walls, gross density ≥ 500 kg/m³	100	EI 90 S	–	–	–	E

N = mortar-based installation, E = installation kit, W = fire batt

1

Correct use on the face of, adjacent to and remote from solid walls

Installation location		Construction and building material	Minimum thickness	Performance class	Mortar-based installation		Dry mortarless installation	
					Casing length [mm]			
			mm	EI TT (v_e–h_o, i ↔ o) S	L = 375	L = 500	L = 375	L = 500
On the face of solid walls		Solid walls, gross density ≥ 500 kg/m³	100	EI 90 S	–	–	–	E
Adjacent to solid walls		Solid walls, gross density ≥ 500 kg/m³	100	EI 90 S	–	–	–	E
Remote from solid walls		Solid walls, gross density ≥ 500 kg/m³	100	EI 90 S	–	–	–	E

E = Installation kit

1

Correct use in solid ceiling slabs

Installation location		Construction and building material	Minimum thickness	Performance class	Mortar-based installation		Dry mortarless installation	
					Casing length [mm]			
			mm	EI TT (v_e–h_o, i ↔ o) S	L = 375	L = 500	L = 375	L = 500
In solid ceiling slabs[1]		Solid ceiling slabs, gross density ≥ 600 kg/m³	125	EI 90 S	N	N	–	–
		Solid ceiling slabs, gross density ≥ 600 kg/m³	150	EI 120 S	–	–	–	W
		Solid ceiling slabs, gross density ≥ 600 kg/m³	125	EI 90 S	N	N	–	–
		Solid ceiling slabs, gross density ≥ 600 kg/m³	125	EI 90 S	N	N	–	–
		Solid ceiling slabs, gross density ≥ 600 kg/m³	125	EI 90 S	N	N	–	–
Suspended installation below the ceiling		Solid ceiling slabs, gross density ≥ 600 kg/m³	125	EI 90 S	–	–	–	E

N = mortar-based installation, W = fire batt
[1] For FK-EU as air transfer damper only up to B × H = 500 × 500 mm

Correct use in lightweight partition walls and fire walls

Installation location		Construction and building material	Minimum thickness	Performance class	Mortar-based installation		Dry mortarless installation	
					Casing length [mm]			
			mm	EI TT (v_e–h_o, i ↔ o) S	L = 375	L = 500	L = 375	L = 500
Lightweight partition walls with metal support structure and cladding on both sides		Lightweight partition walls	100	EI 90 S	N	N	–	E
		Lightweight partition walls	100	EI 120 S[2]	–	–	–	W
		Lightweight partition walls	100	EI 90 S	–	–	W	W
Lightweight partition walls with metal support structure and cladding on both sides, and with flexible ceiling joint		Lightweight partition walls	100[3]	EI 90 S	–	–	–	E
Fire walls with metal support structure and cladding on both sides		Fire walls	115	EI 90 S	N	N	–	E
Lightweight partition walls with metal support structure and cladding on one side		Shaft walls	90	EI 90 S	–	–	–	E
Lightweight partition walls without metal support structure and cladding on one side		Shaft walls	40	EI 90 S	–	–	–	E

N = mortar-based installation, E = installation kit, W = fire batt
[2] Only with lightweight partition walls with a fire resistance ≥ F 120
[3] Wall thickness ≤ 225 mm and 175 mm width of metal studs

1

Installation orientation

Installation orientation with horizontal ducts

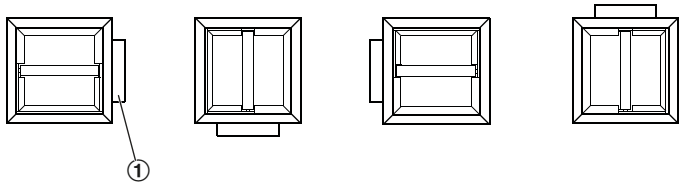

① Release mechanism (mechanical or spring return actuator)

Installation orientation when used as an air transfer damper with horizontal ducts

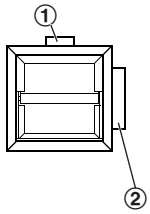

① Duct smoke detector

② Spring return actuator

Installation kit – installation in solid walls

FK-EU

1

Description

/ E1 /
/ E2 /
5

Order code detail

Application

- Installation in solid walls without perimeter mortar infill (dry mortarless installation) requires an installation subframe and an installation kit
- Fire damper, installation subframe and installation kit are supplied unassembled
- Assembly and installation are to be performed by others
- Fire dampers with installation subframe and installation kit only with casing length L = 500 mm
- The installation subframe and the fire damper with installation kit must be installed and secured according to the operating and installation manual
- Fire dampers installed in this manner can be easily removed.

Materials and surfaces

- Installation subframe made of galvanised steel and with intumescent seal
- Installation kit made from special insulation material and mineral wool strips
- Fixing elements made of galvanised steel

Installation kit for dry mortarless installation in solid walls

L_1 in mm	L [mm]	Order code
115	500	E1
240	500	E2

FK-EU with installation subframe and installation kit E1 or E2

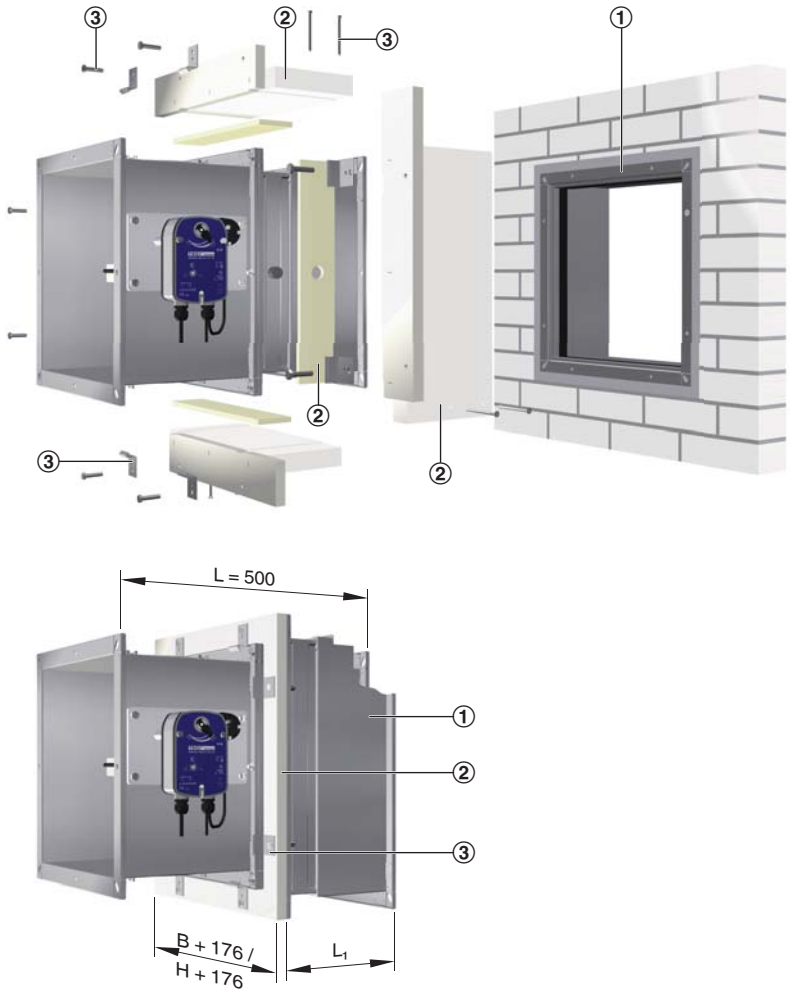

Installation subframe and installation kit E1 or E2, consisting of:

① Installation subframe
② Installation kit
③ Fixing elements

Installation kit – installation with flexible ceiling joint FK-EU

1

Description

/ **GM** /
5

Order code detail

Application

- Installation into solid non-load-bearing internal walls with flexible ceiling joint requires an installation kit
- With the installation kit the fire damper may be installed just below the movement joint; the joint is not interrupted by the installation kit
- The mineral wool used for the flexible joint can also be used above the fire damper
- The fire damper is mortared in together with the installation kit on three sides (to be performed by others)
- Fire dampers with installation kit only with casing length L = 500 mm
- The fire damper and the installation kit must be installed and secured according to the operating and installation manual

Materials and surfaces

- Cover section made of special insulation material and with intumescent seal
- U-channels made of galvanised steel
- Fixing tabs made of galvanised steel
- Filler strips made of mineral wool

Installation kit for installation into solid non-load-bearing walls with flexible ceiling joint

L [mm]	Order code
500	GM

FK-EU with installation kit GM

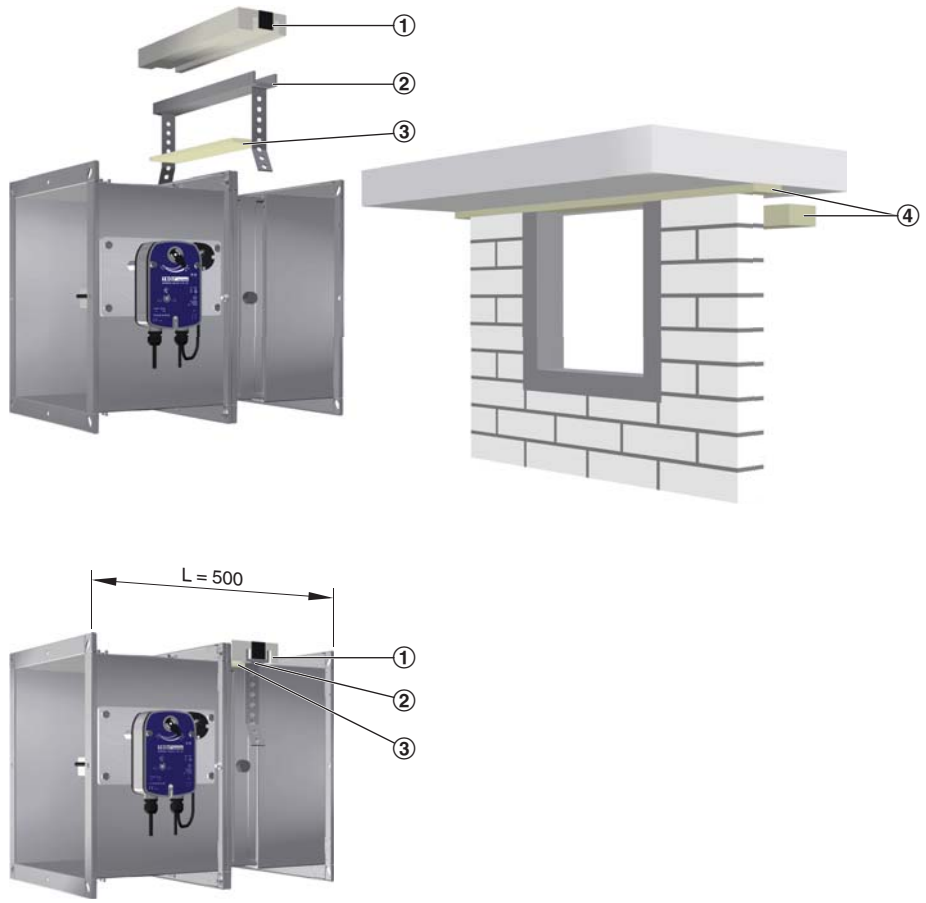

Installation kit GM, consisting of:
① Cover section with intumescent seal
② U-channel (steel) with fixing tab
③ Filler strip
④ Mineral wool (to be provided by others)

Installation kit – for installation on the face of solid walls FK-EU

Description

/ **WA** /
5

Order code detail

Application

- Dry mortarless installation on the face of solid walls requires an installation kit
- Fire damper and installation kit are supplied partly assembled
- Assembly and installation are to be performed by others
- The fire damper and the installation kit must be installed and secured according to the fire damper operating and installation manual and the WA installation manual
- Fire dampers with installation kit only with casing length L = 500 mm

Materials and surfaces

- Wall connection frame made of galvanised steel and with seal
- Installation kit made from special insulation material and mineral wool strips
- Fixing elements made of galvanised steel

Installation kit for dry mortarless installation on the face of solid walls

L [mm]	Order code
500	WA

FK-EU with installation kit WA

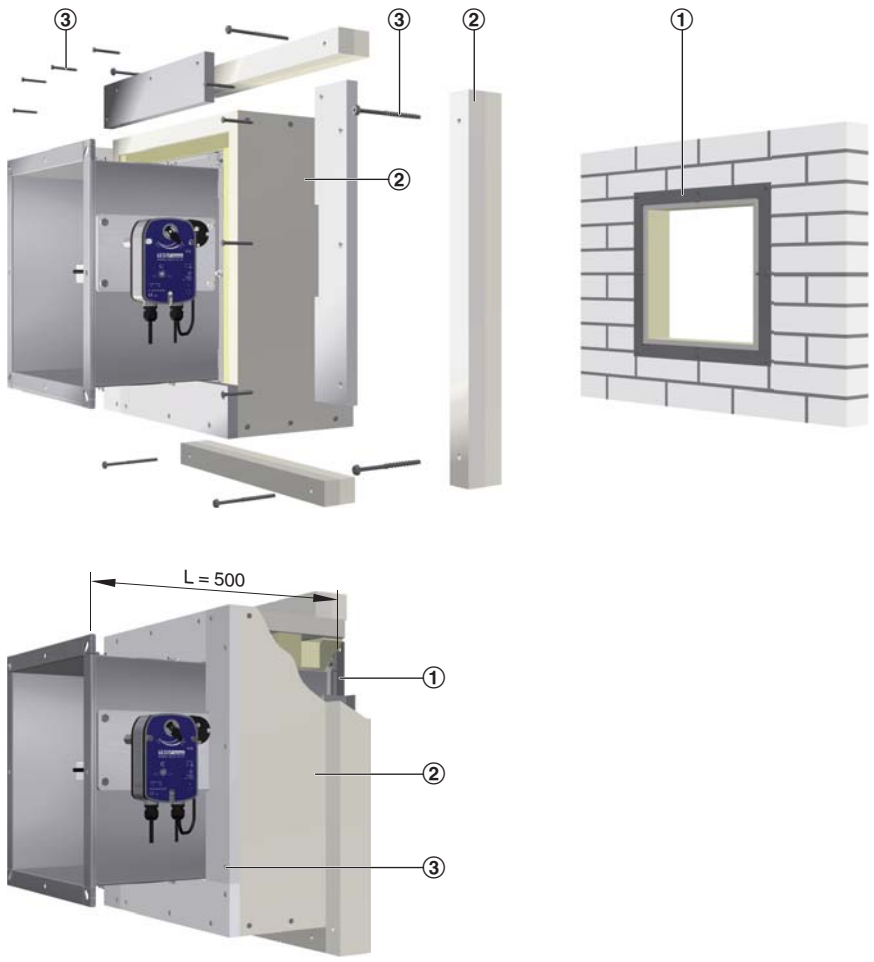

Installation kit WA, consisting of:
① Wall connection frame
② Installation kit
③ Fixing elements

Installation kit – for installation adjacent to solid walls

Description

/ **WV** /
5

Order code detail

Application

- Dry mortarless installation adjacent to solid walls requires an installation kit
- The installation kit is used for the refurbishment of old fire dampers that have been mortared in, or for the connection to a sheet steel duct that has been mortared in; with x ≤ 260 mm
- Fire damper and installation kit are supplied partly assembled
- Assembly and installation are to be performed by others
- Fire dampers with installation kit only with casing length L = 500 mm
- The fire damper and the installation kit must be installed and secured according to the fire damper operating and installation manual and the WV installation manual

Materials and surfaces

- Installation kit made from special insulation material and mineral wool strips
- Fixing elements made of galvanised steel

Installation kit for dry mortarless installation adjacent to solid walls, with x ≤ 260 mm

L [mm]	Order code
500	WV

FK-EU with installation kit WV

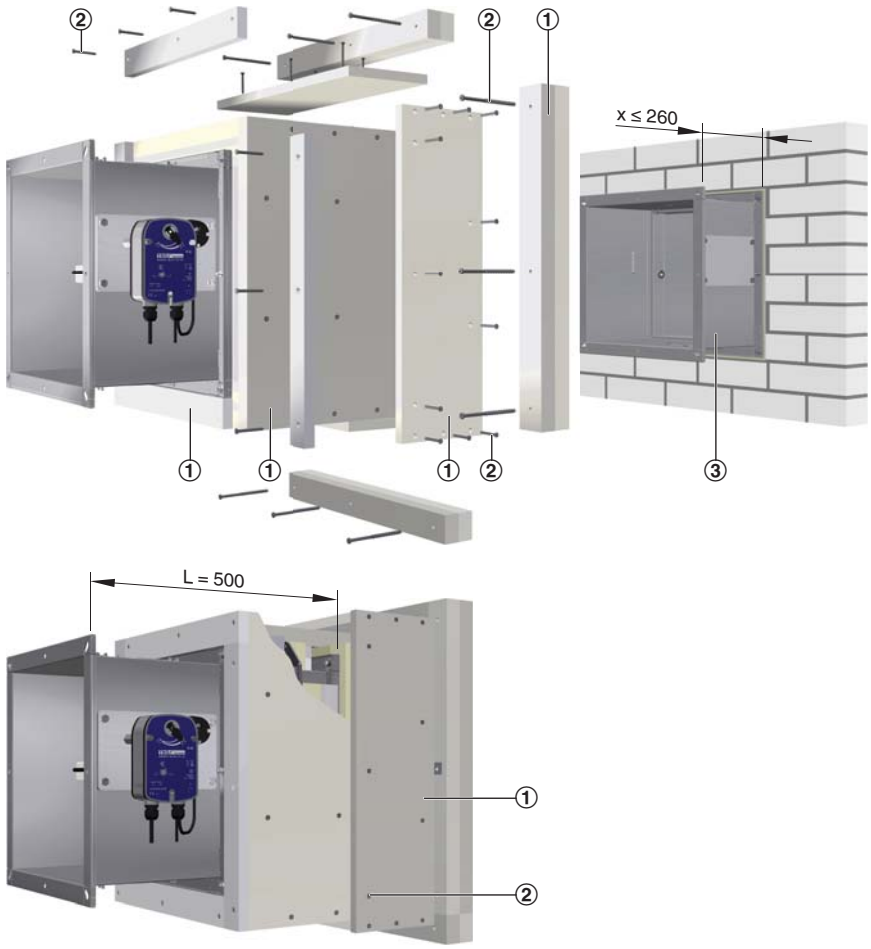

Installation kit WV, consisting of:
① Installation kit
② Fixing elements

③ Fire damper or duct section up for refurbishment (by others)

Installation kit – for installation remote from solid walls FK-EU

Description

/ WE /
5

Order code detail

Application

- Dry mortarless installation remote from solid walls or ceiling slabs requires an installation kit
- The installation kit contains all special parts
- Cut-to-size calcium silicate boards are to be provided by others
- Fire damper and installation kit are supplied partly assembled
- Assembly and installation are to be performed by others
- The fire damper and the installation kit must be installed and secured according to the fire damper operating and installation manual and the WE installation manual
- Fire dampers with installation kit only with casing length L = 500 mm

Materials and surfaces

- Installation kit made from special insulation material and mineral wool strips
- Fixing elements made of galvanised steel
- Existing ducts made of galvanised steel

Installation kit for dry mortarless installation remote from solid walls

L [mm]	Order code
500	WE

To be provided by others

Name	Property/size
Mineral wool	Gross density ≥ 80 kg/m³, melting point > 1000 °C
Mineral wool, 80 mm thick (slab)	Gross density ≥ 80 kg/m³, melting point > 1000 °C
Fixing tab	HUS-H 6 × 100
Washer	8.4, EN ISO 7093-1
Hexagon head screw	M8 × 16, EN ISO4017
Hexagonal nut	M8, EN 24032
Dry wall screw	Ø5 × 50, Ø5 × 70, Ø5 × 80
Threaded rod	M12
Hilti mounting rail	MQ 41-3 or equivalent
Hilti perforated plate	MQZ L13 or equivalent
Steel wire clip	63/11, 2/1, 53
Adhesive	Promat K84
PROMASEALMastic fire protection mastic	Paste
Promatect-LS and Promatect-H	–

Other details according to the WE installation manual.

1

FK-EU with installation kit WE

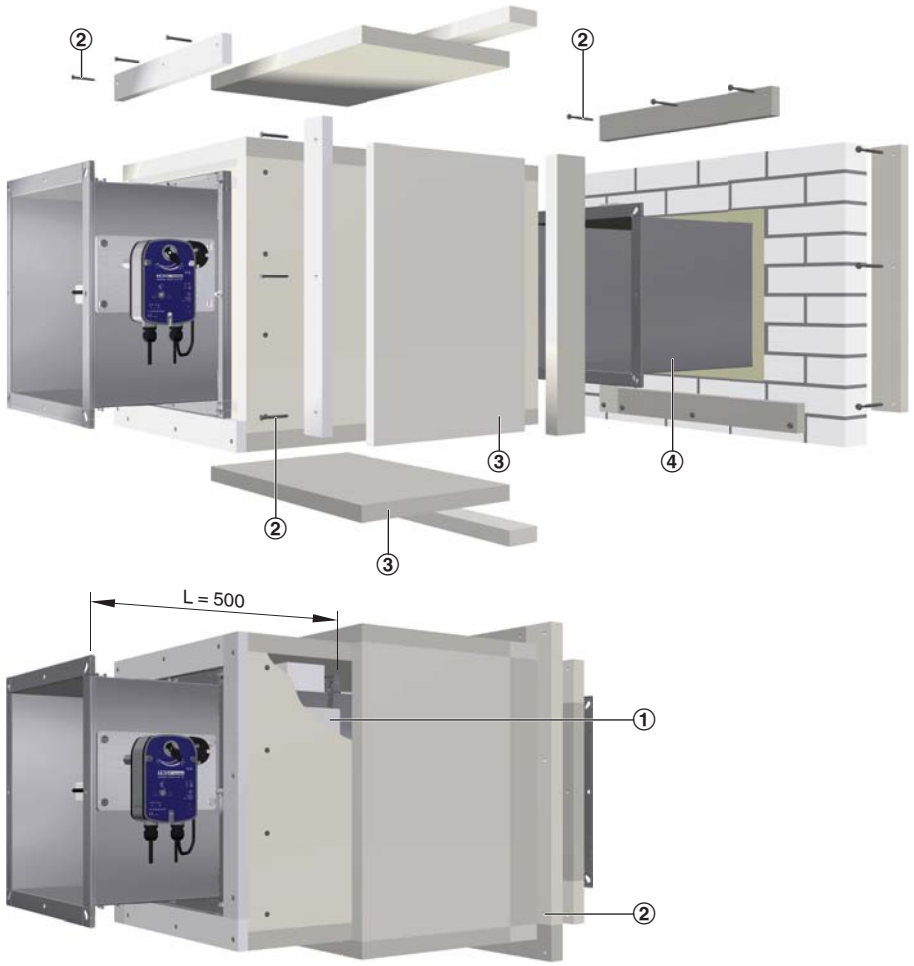

Installation kit WE, consisting of:
① Installation kit (provided by others)
② Fixing elements
③ Calcium silicate boards (provided by others)
④ Duct, galvanised steel (provided by others)

Description

/ **ES** /
5

Order code detail

Application

- Installation without perimeter mortar infill (dry mortarless installation) in lightweight partition walls with metal support structure and cladding on both sides, or installation in shaft walls with or without metal support structure but with cladding on one side requires an installation kit.
- Fire damper and installation kit are supplied unassembled
- Assembly and installation are to be performed by others
- Fire dampers with installation kit only with casing length L = 500 mm
- The fire damper and the installation kit must be installed and secured according to the operating and installation manual

Materials and surfaces

- Installation kit made from special insulation material with intumescent seal and mineral wool strips
- Fixing elements made of galvanised steel

Installation kit for dry mortarless installation in lightweight partition walls, fire walls and shaft walls

L [mm]	Order code
500	ES

FK-EU with installation kit ES

Installation kit ES, consisting of:
① Installation kit
② Fixing elements
③ Lightweight partition wall or fire wall with metal support structure

Installation kit – installation with flexible ceiling joint FK-EU

1

Description

/ GL100[1] /
5

Order code detail

Application

- Dry mortarless installation in lightweight partition walls with metal support structure, cladding on both sides, and with flexible ceiling joint, directly underneath solid ceiling slabs, requires an installation kit.
- The installation kit allows for subsidence of the slab whilst maintaining sealing integrity around the fire damper
- Installation kit, extension piece and the U-channel underneath the installation kit are assembled at the factory to form a unit.
- The fire damper is fixed to the ceiling slab with the fixing elements for the installation kit (to be performed by others)
- Fire dampers with installation kit only with casing length L = 500 mm
- The fire damper and the installation kit must be installed and secured according to the operating and installation manual

Materials and surfaces

- Installation subframe made of special insulation material
- U-channels made of galvanised steel
- Threaded rods made of galvanised steel
- Fixing elements made of galvanised steel
- Extension piece made of galvanised steel (constructions 1, 2, 1-7 and 2-7 additionally powder coated, silver-grey, RAL 7001)

Installation kit for lightweight partition walls with flexible ceiling joint

Wall thickness [mm]	L [mm]	Order code
100	500	GL100[1]

[1]For wall thickness 100 mm when 50 mm sections are used.
Other wall thicknesses and section widths upon request.

FK-EU with installation kit GL100

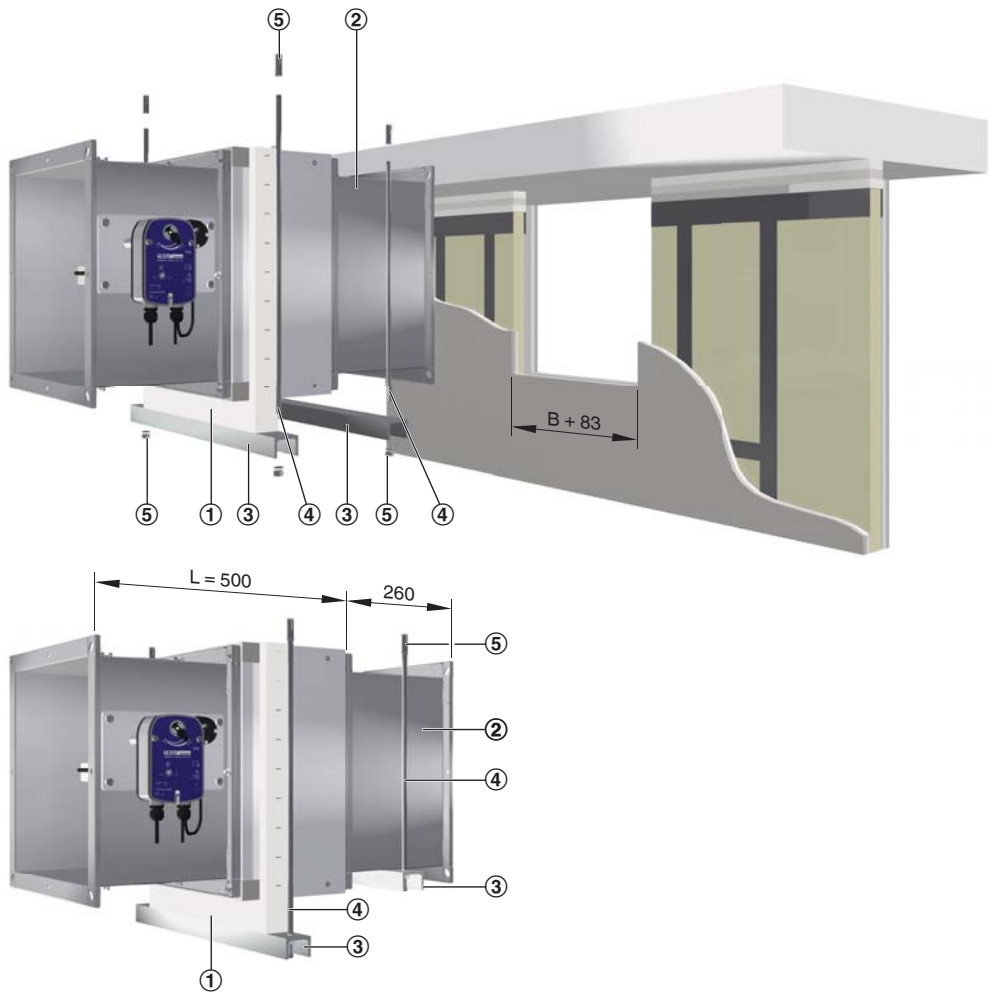

Installation kit GL100, consisting of:
① Installation subframe with U-channel
② Extension piece
③ U-channel
④ Threaded rod
⑤ Fixing elements

1

Description

Cover grille

Application

- If only one end is to be ducted on site, the other end must have a cover grille
- For certain heights an extension piece may be required, see table
- Fire damper, cover grille and, if applicable, extension piece are factory assembled to form a unit
- The free area of the cover grille is approx. 70%
- The fixing holes in the cover grilles and extension pieces match those in the fire damper flanges
- Cover grilles are also available separately
- Cover grilles both ends are approved in Germany only for Type FK fire dampers used as air transfer dampers, general building inspectorate licence Z-6.50-2031.

Materials and surfaces

- Cover grilles made of galvanised sheet steel (and powder-coated silver grey, RAL 7001, when used with powder-coated (1) and stainless steel (2) dampers)

/ A0 /
/ 0A /
/ AA /
6

Order code detail

Cover grilles for FK-EU · FK-EU-1 · FK-EU-2 · FK-EU-7

Operating side	Installation side	Order code
Cover grille	–	A0
–	Cover grille	0A
Cover grille	Cover grille	AA

Note: AA for FK-EU as air transfer damper

Technical data

Location and length of extension pieces [mm]

H	Operating side	Installation side	L	Order code
200 – 550	–	–	375/500	A0
600 – 800	120	–	375/500	A0
200 – 300	–	–	500	0A
350 – 550	–	120	500	0A
600 – 800	–	260	500	0A
200 – 300	–	–	500	AA
350 – 550	–	120	500	AA
600 – 800	120	260	500	AA

Note:
Cover grilles for both sides (AA) are available only for the construction used as an air transfer damper.

The distance »a« between the open damper blade and the spigot should be 50 mm.

Cover grille

① Cover grille, mesh aperture 10 mm × 10 mm, wire width 2 mm
② Extension piece

The distance »a« between the open damper blade and the spigot should be 50 mm.

Cover grille

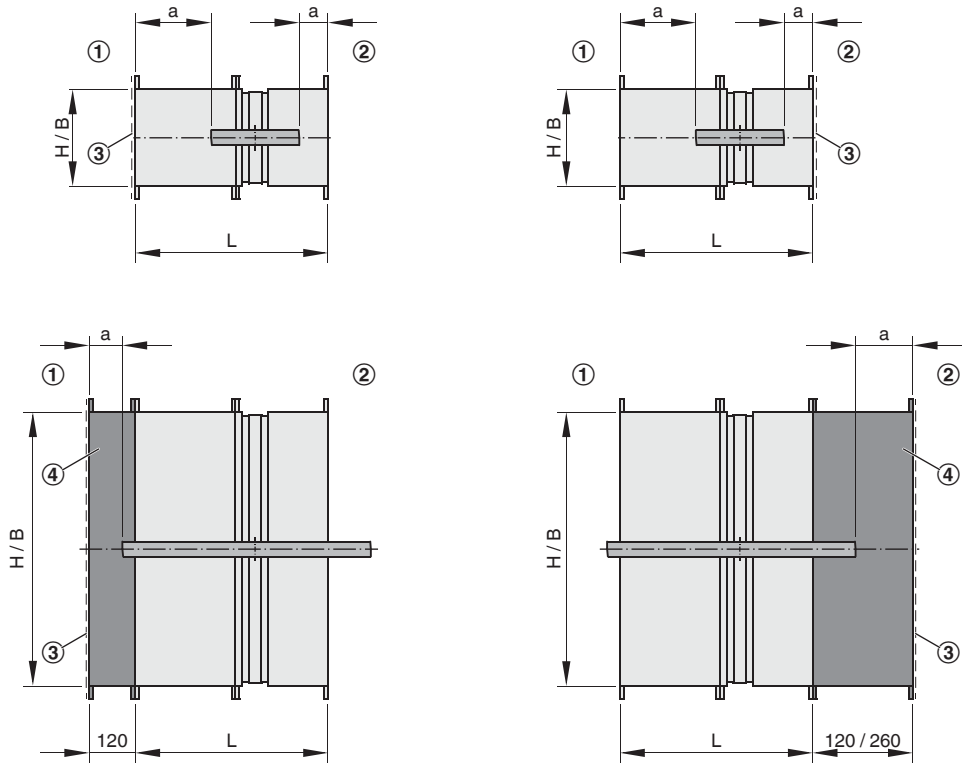

① Operating side
② Installation side
③ Cover grille, mesh aperture 10 mm × 10 mm, wire width 2 mm
④ Extension piece

Extension piece and cover grille are supplied factory assembled.

1

Description

Application
- Use of circular spigots facilitates the direct connection of circular ducts
- For certain heights an extension piece may be required, see table
- Fire damper, spigot and, if applicable, extension piece are factory assembled to form a unit
- The fixing holes in the spigot plates and extension pieces match those in the fire damper flanges
- Spigot plates are also available separately.

Materials and surfaces
- Circular spigot plates made of galvanised sheet steel (and powder-coated silver grey, RAL 7001, when used with powder-coated (1) and stainless steel (2) dampers)

/ R0 /
/ 0R /
/ RR /
6

Order code detail

Circular spigot plate for FK-EU · FK-EU-1 · FK-EU-2 · FK-EU-7

Operating side	Installation side	Order code
Spigot	–	R0
–	Spigot	0R
Spigot	Spigot	RR

Technical data

Location and length of extension pieces [mm]

H	Operating side	Installation side	L	Order code
200 – 550	–	–	375/500	R0
600 – 800	120	–	375/500	R0
200 – 300	–	–	500	0R
350 – 550	–	120	500	0R
600 – 800	–	260	500	0R
200 – 300	–	–	500	RR
350 – 550	–	120	500	RR
600 – 800	120	260	500	RR

The distance »a« between the open damper blade and the spigot should be 50 mm.

Circular spigot

① Circular spigot ② Extension piece

The distance »a« between the open damper blade and the spigot should be 50 mm.

Circular spigot

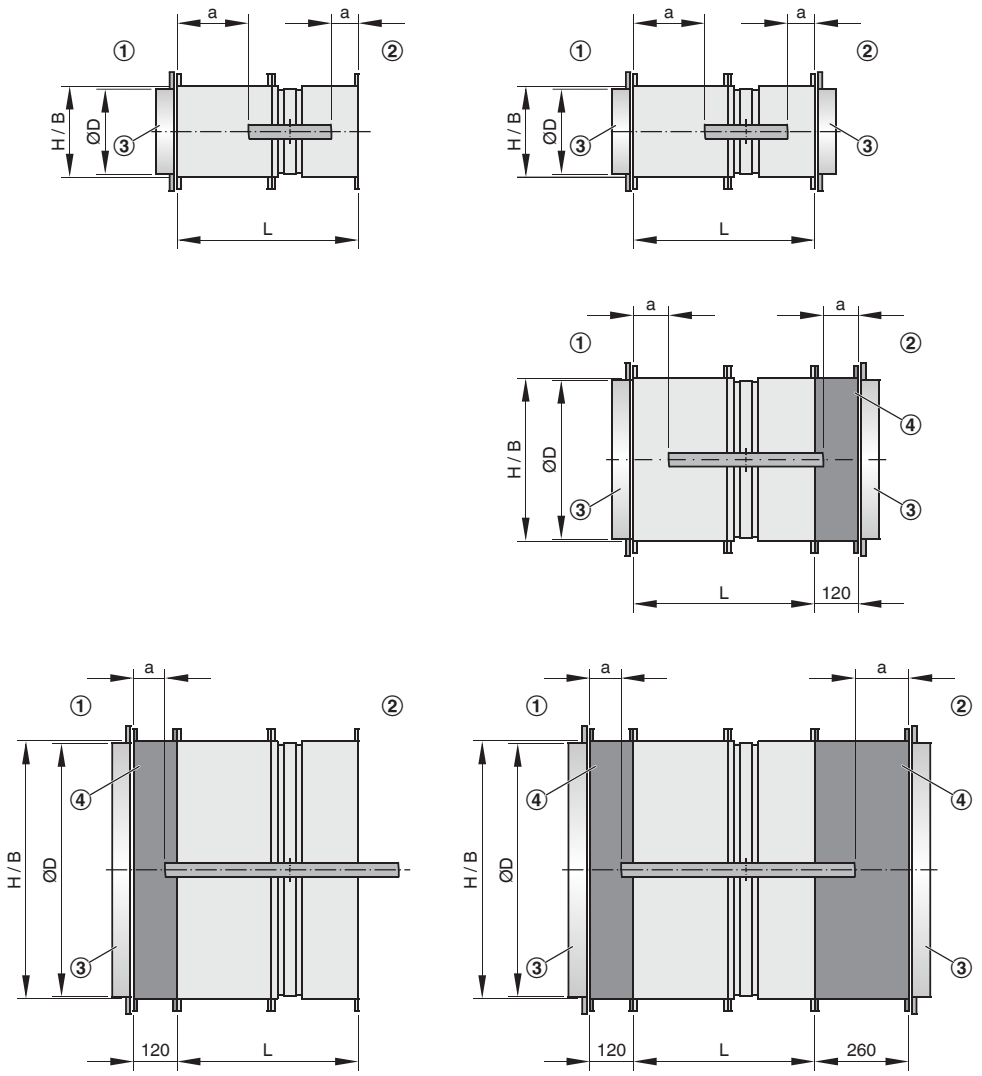

① Operating side
② Installation side
③ Circular spigot
④ Extension piece

Extension pieces and spigot plates are supplied factory assembled

Dimensions [mm]

Nominal size	B × H	ØD
200	200 × 200	198
250	250 × 250	248
300	300 × 300	248
350	350 × 350	313
400	400 × 400	398
450	450 × 450	448
500	500 × 500	498
550	550 × 550	498
600	600 × 600	558
650	650 × 650	628
700	700 × 700	628
750	750 × 750	708
800	800 × 800	798

1

Description

Flexible connector

Application

- For information on how to limit such loads please refer to the guideline regarding fire protection requirements on ventilation systems (Lüftungsanlagen-Richtlinie, LüAR)
- As ducts may expand and walls may become deformed in the event of a fire, we recommend using flexible connectors for the following applications: installation in lightweight partition walls, in lightweight shaft walls, with fire batts, and in lightweight fire walls
- Flexible connectors should be installed in such a way that both ends can compensate both tension and compression
- Flexible ducts can be used as an alternative
- For certain heights an extension piece may be required, see table
- The fixing holes in the flexible connectors and extension pieces match those in the fire damper flanges
- Flexible connectors are also available separately

Materials and surfaces

- Flexible connectors made of galvanised steel and fibre-reinforced plastic
- Fire resistance properties to 4102; B2

/ **S0** /
/ **0S** /
/ **SS** /
6

Order code detail

Flexible connector for FK-EU · FK-EU-1 · FK-EU-2 · FK-EU-7

Operating side	Installation side	Order code
Flexible connector	–	S0
–	Flexible connector	0S
Flexible connector	Flexible connector	SS

Technical data

Location and length of extension pieces [mm]

H	Operating side	Installation side	L	Order code
200 – 550	–	–	375/500	S0
600 – 800	120	–	375/500	S0
200 – 300	–	–	500	0S
350 – 550	–	120	500	0S
600 – 800	–	260	500	0S
200 – 300	–	–	500	SS
350 – 550	–	120	500	SS
600 – 800	120	260	500	SS

* flexible length
≥ 100 mm when installed

The distance »a« between the open damper blade and the flexible connector should be 50 mm.

Flexible connector

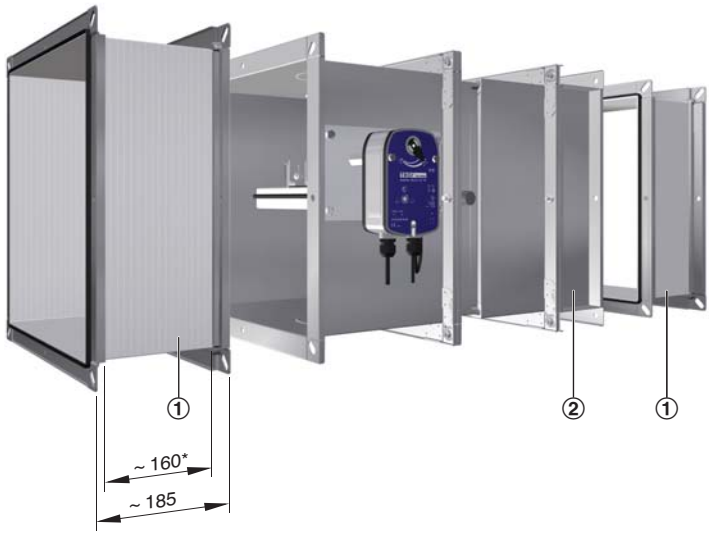

① Flexible connector ② Extension piece

1 The distance »a« between the open damper blade and the flexible connector should be 50 mm.

Flexible connector

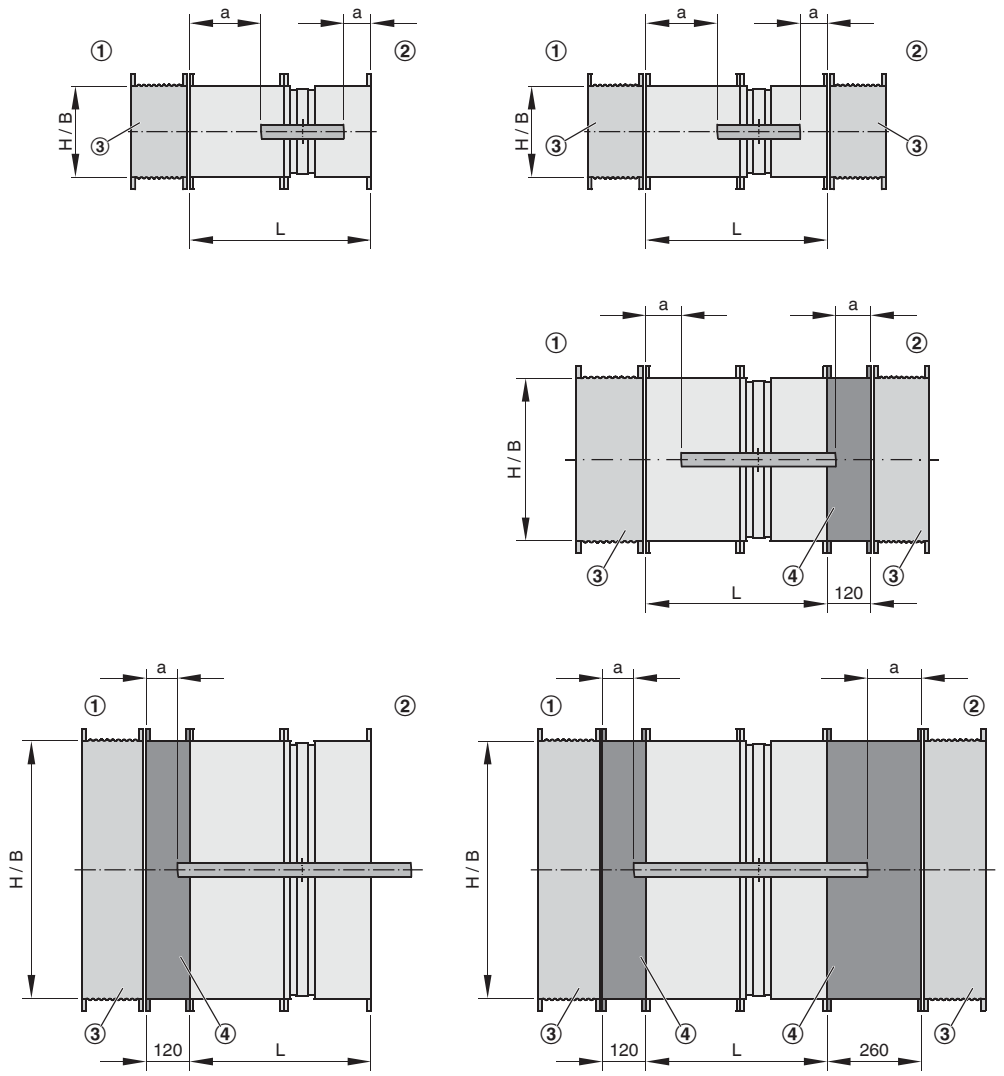

① Operating side
② Installation side
③ Flexible connector
④ Extension piece

Extension pieces are supplied factory assembled.
Flexible connectors are supplied unassembled, connection material is to be provided by others.

Description

Extension piece

Application

- Fire dampers ordered with flexible connector, cover grille or circular spigot plate are supplied including extension piece.
- Extension pieces are also available separately

Materials and surfaces

- Extension pieces made of galvanised sheet steel (and powder-coated silver grey, RAL 7001, when used with powder-coated (1) and stainless steel (2) dampers)

Technical data

When using cover grilles, circular spigot plates or flexible connectors an extension piece may be required.

Dimensions [mm]

H	200	250	300	350	400	450	500	550	600	650	700	750	800
x	–224	–199	–174	–149	–124	–99	–74	–49	–24*	1*	26*	51*	76*
y													
L = 375	23*	48*	73*	98*	123*	148*	173*	198*	223*	248*	273*	298*	323*
L = 500	–102	–77	–52	–27*	–2*	23*	48*	73*	98*	123*	148*	173*	198*

*** Extension piece required**

The distance »a« between the open damper blade and the cover grille, circular spigot or flexible connector should be 50 mm.

Open blade protrusion

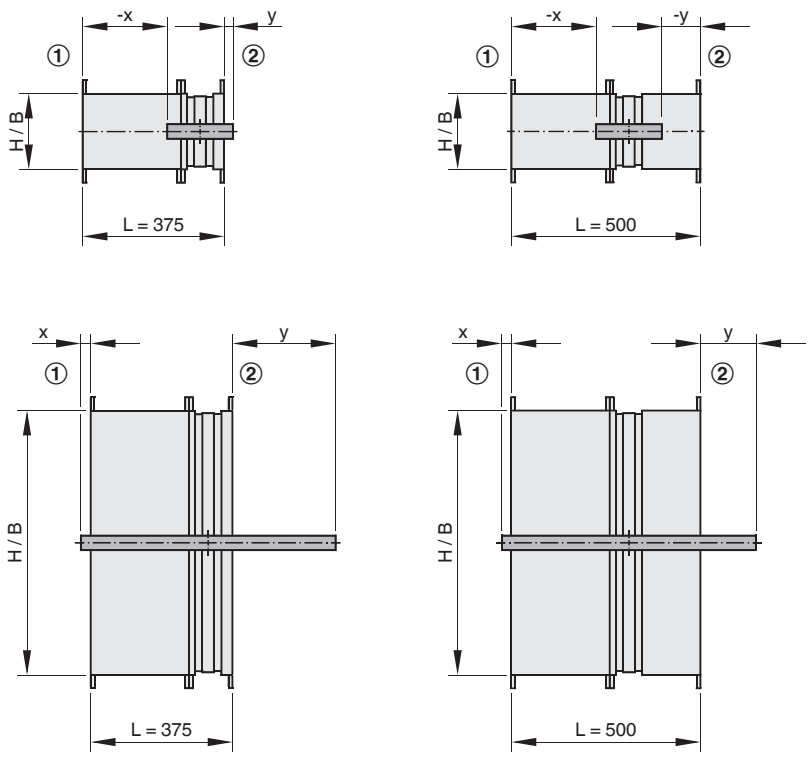

① Operating side ② Installation side

1 The distance »a« between the open damper blade and the flexible connector should be 50 mm.

Extension piece

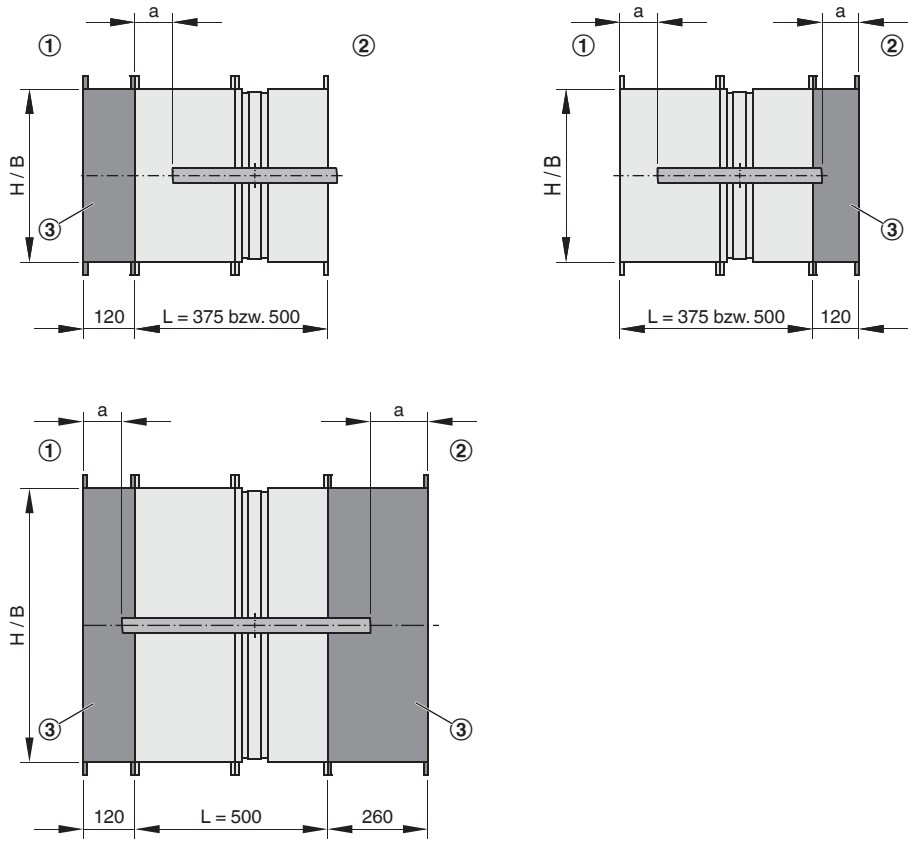

① Operating side
② Installation side
③ Flexible connector, on operating and/or installation side

Description

Limit switch

For detailed information on limit switches see Chapter 1.2

FK-EU with limit switch

- Limit switches with volt-free contacts enable the damper blade position indication.
- Up to the maximum switch rating, relays or indicator lights for fire alarm systems can be used
- One limit switch each is required for damper blade positions OPEN and CLOSED
- Fire dampers with a fusible link can be supplied with one or two limit switches; the switches can also be fitted later

/ **Z01**
/ **Z02**
/ **Z03**
7

Order code detail

Attachments	Order code
Limit switch for damper blade position CLOSED	Z01
Limit switch for damper blade position OPEN	Z02
Limit switches for damper blade positions CLOSED and OPEN	Z03

Description

Limit switch (explosion-proof)

For detailed information on limit switches see Chapter 1.2

FK-EU with limit switch (explosion-proof)

- According to declaration of conformity TÜV 11 ATEX 085420 X explosion-proof limit switches with volt-free contacts can indicate the damper blade position.
- Up to the maximum switch rating, relays or indicator lights for fire alarm systems can be used
- The limit switches must be connected in a separately approved casing with a type of protection according to EN 60079-0
- One limit switch each is required for damper blade positions OPEN and CLOSED
- Fire dampers with a fusible link can be supplied with one or two limit switches; the switches can also be fitted later

/ **Z01EX**
/ **Z02EX**
/ **Z03EX**
7

Order code detail

Attachments	Order code
Limit switch (explosion-proof) for damper blade position CLOSED	Z01EX
Limit switch (explosion-proof) for damper blade position OPEN	Z02EX
Limit switches (explosion-proof) for damper blade positions CLOSED and OPEN	Z03EX

ATEX certification

ATEX areas of application for the FK-EU

Release mechanism	Marking	Ambient temperature	Maximum airflow velocity
Fusible link	II 2D c T80 °C/II 2G c IIC T6	–40 to 40 °C	8 m/s
Fusible link and limit switch	II 2D c T80 °C/II 2G c IIC T6	–20 to 40 °C	8 m/s

Description

FK-EU
with spring return actuator

For detailed information on the spring return actuator see Chapter 1.2

FK-EU with spring return actuator

- An open/close actuator allows for the remote control of the fire damper and/or release by a suitable duct smoke detector
- If the supply voltage fails, or with thermoelectric release, the damper closes (power off to close)
- Fire dampers with spring return actuators can be functionally checked OPEN/CLOSED/OPEN
- Ambient temperature, normal operation –30 to 50 °C
- Two integral limit switches with volt-free contacts enable the damper blade position indication (OPEN and CLOSED)
- B(L)F24-T-ST TR: The connecting cables of the spring return actuator are fitted with plugs, which ensure quick and easy connection to the TROX AS-i bus system
- A conversion kit is available for adding an actuator to the standard construction
- In case of conventional wiring (Z45) the voltage is supplied by a safety transformer

/ Z43
/ Z45
/ Z60
/ Z61
/ Z64
/ Z65
/ Z66
7

Order code detail

Attachments	Order code
B(L)F230-T TR	Z43
B(L)F24-T-ST TR	Z45
B(L)F24-T-ST TR including power supply unit BKN230-24-1 TR	Z60
B(L)F24-T-ST TR including power supply unit BKN230-24-1 TR and control module BKS24-1 TR	Z61
Joventa SFR1.90 T (24 V)	Z64
Joventa SFR2.90 T (230 V)	Z65
Joventa SFR1.90 T SLC (24 V)	Z66

Spring return actuator BLF for FK-EU in sizes up to B × H ≤ 800 × 400 mm.
Spring return actuator BF for FK-EU in sizes from B × H ≤ 800 × 400 mm.

Description

FK-EU with spring return actuator (explosion-proof)

For detailed information on the spring return actuator see Chapter 1.2

FK-EU with explosion-proof spring return actuator

- An open/close actuator allows for the remote control of the fire damper and/or release by a suitable duct smoke detector
- The fire damper can be used in supply and extract air systems in areas with potentially explosive atmospheres
- If the supply voltage fails, or with thermoelectric release, the damper closes (power off to close)
- Fire dampers with spring return actuators can be functionally checked OPEN/CLOSED/OPEN
- Two integral limit switches with volt-free contacts enable the damper blade position indication (OPEN and CLOSED)
- The electrical connection is made in the explosion-proof terminal box
- Release temperature of the spring return actuator is 72 °C
- Declaration of conformity: TÜV 11 ATEX 085420 X

/ ZEX1
/ ZEX3
7

Order code detail

Attachments	Order code
ExMax-15-BF TR	ZEX1
RedMax-15-BF TR	ZEX3

ATEX certification

ATEX areas of application

Release mechanism	Attachments	Marking	Ambient temperature
ExPro-TT	ExMax-15-BF TR	II 2D c T80 °C II 2G c IIC T6	–40 to 40 °C
	RedMax-15-BF TR	II 3D c T80 °C II 3G c IIC T6	–40 to 40 °C

Description

FK-EU
as air transfer damper

For detailed information on the spring return actuator see Chapter 1.2

For detailed information on the duct smoke detector see Chapter 1.2

FK-EU as air transfer damper with spring return actuator BLF or BF and duct smoke detector RM-O-3-D

- An open/close actuator allows for remote control of the air transfer damper and/or release by a suitable duct smoke detector
- If the supply voltage fails, or with thermoelectric release or smoke detection the damper closes (power off to close)
- Fire dampers with spring return actuators can be functionally checked OPEN/CLOSED/OPEN
- Two integral limit switches with volt-free contacts enable the damper blade position indication (OPEN and CLOSED)

Duct smoke detector Type RM-O-3-D

Just as the spring return actuator, the duct smoke detector RM-O-3-D is a permanent part of the air transfer damper.

Essential characteristics of the duct smoke detector:

- General building inspectorate licence Z-78.6-125
- For airflow velocities from 1 – 20 m/s
- Independent of the airflow direction
- Supply voltage 230 V AC, 50/60 Hz*
- Volt-free signal and alarm relays
- Integral signal lamps
- Contamination level indicator
- Automatic adjustment of alarm threshold
- Long service life
- Temperature range 0 – 60 °C

* The 24 V construction includes a voltage monitoring module

/ **Z43RM**
/ **Z45RM**
7

Order code detail

Attachments	Order code
Duct smoke detector RM-O-3-D with spring return actuator B(L)F230-T TR (cover grilles both sides required [AA])	Z43RM
Duct smoke detector RM-O-3-D with spring return actuator B(L)F24-T ST TR (cover grilles both sides required [AA])	Z45RM

Spring return actuator BLF for FK-EU in sizes up to B × H ≤ 800 × 400 mm.
Spring return actuator BF for FK-EU in sizes from B × H ≤ 800 × 400 mm.

1

Description

FK-EU with TROXNETCOM module

For detailed information on TROXNETCOM see Chapter 1.2

FK-EU with spring return actuator and TROXNETCOM

- The fire dampers with spring return actuator BLF24-T-ST TR or BF24-T-ST TR and the modules shown here as attachments form a functional unit ready for automatic operation
- The components are factory assembled and wired
- It enables the integration of different components (modules) into a network regardless of the manufacturer
- The modules control actuators and/or receive signals from sensors

Application

LON:

- LON indicates a standard local operating network system with manufacturer-independent communications
- Data transmission is based on a uniform protocol
- LonMark defines standards to ensure product compatibility
- Only the bus line and the supply voltage remain to be connected by others
- LON-WA1/B2: To provide the control input signal for up to two fire dampers
- LON-WA1/B2-AD: Connection box for connecting the second fire damper with 24 V DC supply voltage to LON-WA1/B2-AD
- LON-WA17B2-AD230: Connection box with integral 230/24 V power supply unit for the connection of a second actuator-driven 24 V fire damper to LON-WA1/B2

AS-i:

- The AS interface is a global standard bus system according to EN 50295 and IEC 62026-2
- The module sends the control signals between the spring return actuator and the controller and power unit
- This allows for controlling the actuator and monitoring of its running time during functional testing
- The voltage (24 V DC) for the module and the actuator is supplied via the two-wire AS-i flat cable
- Function display: operation, 4 inputs, 2 outputs

/ ZL06
/ ZL07
/ ZL08
7

Order code detail

/ ZA07
/ ZA11
7

Order code detail

Attachments	Order code
LON-WA1/B2 and B(L)F24-T-ST TR	ZL06
LON-WA1/B2-AD and B(L)F24-T-ST TR	ZL07
LON-WA1/B2-AD230 and B(L)F24-T-ST TR	ZL08
AS-EM and B(L)F24-T-ST TR	ZA07
AS-RM/BD-UE, B(L)F24-T-ST TR and RM-O-3-D	ZA11

Spring return actuator BLF for FK-EU in sizes up to B × H ≤ 800 × 400 mm.
Spring return actuator BF for FK-EU in sizes from B × H ≤ 800 × 400 mm.

Description

ATEX certification

FK-EU with spring return actuator (explosion-proof) and TROXNETCOM

- The AS interface is a global standard bus system according to EN 50295 and IEC 62026-2
- It enables the integration of different components (modules) into a network regardless of the manufacturer
- The fire dampers with spring return actuator ExMax/RedMax-15-BF-TR and module AS-EM/C form a functional unit ready for automatic operation.
- The modules control actuators and/or receive signals from sensors
- The module is to be installed and wired outside of the potentially explosive atmosphere by others

Application

- The module sends the control signals between the spring return actuator and the controller and power unit
- This allows for controlling the actuator and monitoring of its running time during functional testing
- The voltage (24 V DC) for the module and the actuator is supplied via the two-wire AS-i flat cable
- Function display: operation, 4 inputs, 2 outputs

/ ZEX2
/ ZEX4
7

Order code detail

Attachments	Order code
AS-Interface module and ExMax-15-BF TR	ZEX2
AS-Interface module and RedMax-15-BF TR	ZEX4

Description

Duct smoke detector
RM-O-3-D

Duct smoke detector
RM-O-VS-D

For detailed information on the duct smoke detector see Chapter 1.2

General

- To prevent smoke from spreading in buildings, it is extremely important that the smoke is detected at an early stage.
- Duct smoke detectors that operate on the principle of light scattering detect the smoke regardless of its temperature so that the fire dampers can be closed before the release temperature of 72 °C is reached
- If the air contains suspended particles, as is the case with smoke, beams of light are deflected off these. A sensor (photodiode), which does not receive light in clear air, is illuminated by the scattered light.
- The fire damper or smoke protection damper blade is released when the brightness of the scattered light exceeds a certain threshold

Application

RM-O-3-D:

- Duct smoke detector for fire dampers and smoke protection dampers
- General building inspectorate licence Z-78.6-125
- For airflow velocities from 1 – 20 m/s
- Independent of the airflow direction
- Supply voltage 230 V AC, 50/60 Hz or 24 V DC with voltage monitoring module (VWM) (upon request)
- Volt-free signal and alarm relays
- Integral signal lamps
- Contamination level indicator
- Automatic adjustment of alarm threshold
- Long service life
- Temperature range 0 – 60 °C

RM-O-VS-D:

- Duct smoke detector for fire dampers and smoke protection dampers
- General building inspectorate licence Z-78.6-67
- For airflow velocities from 1 – 20 m/s
- Independent of the airflow direction
- Airflow monitoring with warning for lower limit 2 m/s
- Supply voltage 230 V AC, 50/60 Hz
- Volt-free signal and alarm relays
- Integral signal lamps
- Contamination level indicator
- Automatic adjustment of alarm threshold
- Long service life
- Temperature range 0 – 60 °C

Attachments	Order code
Smoke detector	RM-O-3-D
	RM-O-VS-D

Duct smoke detectors are attachments and to be ordered separately.
RM-O-3-D can also be supplied assembled and wired for standard application fire dampers.

Free area, resistance coefficient and correction values FK-EU

1

H [mm]	Parameter	B [mm]									
		200	250	300	350	400	450	500	550	600	650
200	A [m²]	0.02	0.027	0.034	0.041	0.048	0.055	0.062	0.069	0.076	0.083
	Z	1.12	0.94	0.77	0.71	0.65	0.59	0.53	0.53	0.47	0.47
	K	1	1	0	0	0	0	0	0	0.5	0.5
250	A [m²]	0.029	0.039	0.048	0.058	0.067	0.077	0.086	0.096	0.105	0.115
	Z	0.91	0.77	0.62	0.58	0.53	0.48	0.43	0.43	0.38	0.38
	K	1	1	0	0	0	0	0	0	0.5	0.5
300	A [m²]	0.038	0.05	0.062	0.074	0.086	0.098	0.11	0.122	0.134	0.146
	Z	0.78	0.66	0.53	0.49	0.45	0.41	0.37	0.37	0.33	0.33
	K	1	1	0	0	0	0	0	0	0.5	0.5
350	A [m²]	0.047	0.062	0.076	0.091	0.105	0.12	0.134	0.149	0.163	0.178
	Z	0.68	0.58	0.47	0.43	0.4	0.36	0.32	0.32	0.29	0.29
	K	1	1	0	0	0	0	0	0	0.5	0.5
400	A [m²]	0.056	0.073	0.09	0.107	0.124	0.141	0.158	0.175	0.192	0.209
	Z	0.63	0.53	0.43	0.4	0.36	0.33	0.3	0.3	0.26	0.26
	K	1	1	0	0	0	0	0	0	0.5	0.5
450	A [m²]	0.049	0.067	0.084	0.102	0.119	0.137	0.154	0.172	0.189	0.207
	Z	1.48	1.13	0.98	0.85	0.79	0.73	0.67	0.61	0.61	0.61
	K	5.5	3.5	2	2	1	1	0	0	0	0
500	A [m²]	0.056	0.076	0.096	0.116	0.136	0.156	0.176	0.196	0.216	0.236
	ζ	1.35	1.03	0.86	0.76	0.7	0.65	0.59	0.54	0.54	0.54
	K	5.5	3.5	2	2	1	1	0	0	0	0

H [mm]	Parameter	B [mm]									
		700	750	800	900	1000	1100	1200	1300	1400	1500
200	A [m²]	0.09	0.097	0.104	0.084	0.094	0.104	0.114	0.124	0.134	0.144
	Z	0.41	0.41	0.41	2.18	2.18	2.18	2.18	2.18	1.9	1.9
	K	1	1	1	–1	–1	–1	–1	–1	–1	–1
250	A [m²]	0.124	0.134	0.143	0.126	0.141	0.156	0.171	0.186	0.201	0.216
	Z	0.34	0.34	0.34	1.26	1.26	1.26	1.26	1.26	1.11	1.11
	K	1	1	1	–1	–1	–1	–1	–1	–1	–1
300	A [m²]	0.158	0.17	0.182	0.168	0.188	0.208	0.228	0.248	0.268	0.288
	Z	0.29	0.29	0.29	0.89	0.89	0.89	0.89	0.89	0.78	0.78
	K	1	1	1	–1	–1	–1	–1	–1	–1	–1
350	A [m²]	0.192	0.207	0.221	0.21	0.235	0.26	0.285	0.31	0.335	0.36
	Z	0.25	0.25	0.25	0.69	0.69	0.69	0.69	0.69	0.6	0.6
	K	1	1	1	–1	–1	–1	–1	–1	–1	–1
400	A [m²]	0.226	0.243	0.26	0.252	0.282	0.312	0.342	0.372	0.402	0.432
	Z	0.23	0.23	0.23	0.57	0.57	0.57	0.57	0.57	0.5	0.5
	K	1	1	1	–1	–1	–1	–1	–1	–1	–1
450	A [m²]	0.224	0.242	0.259	0.294	0.329	0.364	0.399	0.434	0.469	0.504
	Z	0.55	0.55	0.55	0.49	0.49	0.49	0.49	0.49	0.43	0.43
	K	0	0	–1	–1	–1	–1	–1	–1	–1	–1
500	A [m²]	0.256	0.276	0.296	0.336	0.376	0.416	0.456	0.496	0.536	0.576
	ζ	0.49	0.49	0.49	0.43	0.43	0.43	0.43	0.43	0.38	0.38
	K	0	0	–1	–1	–1	–1	–1	–1	–1	–1

Free area, resistance coefficient and correction values FK-EU

H [mm]	Parameter	B [mm]								
		300	350	400	450	500	550	600	650	700
550	A [m²]	0.108	0.131	0.153	0.176	0.198	0.221	0.243	0.266	0.288
	Z	0.78	0.69	0.64	0.59	0.54	0.49	0.49	0.49	0.44
	K	2	2	1	1	0	0	0	0	0
600	A [m²]	0.12	0.145	0.17	0.195	0.22	0.245	0.27	0.295	0.32
	Z	0.7	0.62	0.57	0.53	0.48	0.44	0.44	0.44	0.4
	K	2	2	1	1	0	0	0	0	0
650	A [m²]	0.132	0.16	0.187	0.215	0.242	0.27	0.297	0.325	0.352
	Z	0.66	0.57	0.53	0.49	0.45	0.41	0.41	0.41	0.37
	K	2	2	1	1	0	0	0	0	0
700	A [m²]	0.144	0.174	0.204	0.234	0.264	0.294	0.324	0.354	0.384
	Z	0.61	0.53	0.49	0.46	0.42	0.38	0.38	0.38	0.34
	K	2	2	1	1	0	0	0	0	0
750	A [m²]	0.156	0.189	0.221	0.254	0.286	0.319	0.351	0.384	0.416
	Z	0.58	0.5	0.47	0.43	0.4	0.36	0.36	0.36	0.32
	K	2	2	1	1	0	0	0	0	0
800	A [m²]	0.168	0.203	0.238	0.273	0.308	0.343	0.378	0.413	0.448
	ζ	0.54	0.48	0.44	0.41	0.37	0.34	0.34	0.34	0.31
	K	2	2	1	1	0	0	0	0	0

H [mm]	Parameter	B [mm]								
		750	800	900	1000	1100	1200	1300	1400	1500
550	A [m²]	0.311	0.333	0.378	0.423	0.468	0.513	0.558	0.603	0.648
	Z	0.44	0.44	0.39	0.39	0.39	0.39	0.39	0.34	0.34
	K	0	–1	–1	–1	–1	–1	–1	–1	–1
600	A [m²]	0.345	0.37	0.42	0.47	0.52	0.57	0.62	0.67	0.72
	Z	0.4	0.4	0.35	0.35	0.35	0.35	0.35	0.31	0.31
	K	0	–1	–1	–1	–1	–1	–1	–1	–1
650	A [m²]	0.38	0.407	0.462	0.517	0.572	0.627	0.682	0.737	0.792
	Z	0.37	0.37	0.33	0.33	0.33	0.33	0.33	0.29	0.29
	K	0	–1	–1	–1	–1	–1	–1	–1	–1
700	A [m²]	0.414	0.444	0.504	0.564	0.624	0.684	0.744	0.804	0.864
	Z	0.34	0.34	0.31	0.31	0.31	0.31	0.31	0.27	0.27
	K	0	–1	–1	–1	–1	–1	–1	–1	–1
750	A [m²]	0.449	0.481	0.546	0.611	0.676	0.741	0.806	0.871	0.936
	Z	0.32	0.32	0.29	0.29	0.29	0.29	0.29	0.25	0.25
	K	0	–1	–1	–1	–1	–1	–1	–1	–1
800	A [m²]	0.483	0.518	0.588	0.658	0.728	0.798	0.868	0.938	1.008
	ζ	0.31	0.31	0.27	0.27	0.27	0.27	0.27	0.24	0.24
	K	0	–1	–1	–1	–1	–1	–1	–1	–1

1

Dimensions

FK-EU with fusible link

FK-EU with fusible link

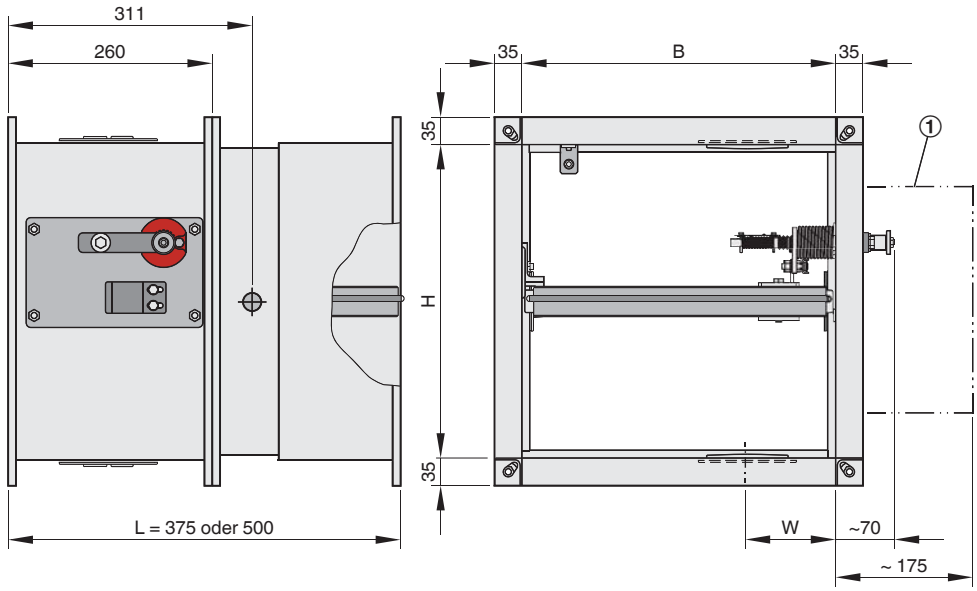

W: 115 mm (B < 250 mm: 94 mm)

1 Keep clear to provide access to the release mechanism

Weight

H	B									
	200	250	300	350	400	450	500	550	600	650
200	10	11	12	13	15	16	17	18	19	20
250	11	12	13	15	16	17	18	19	21	22
300	12	13	14	16	17	18	19	21	23	24
350	13	15	16	17	18	20	22	23	25	26
400	15	16	17	18	20	22	24	26	27	28
450	16	17	18	20	22	24	26	28	29	29
500	17	18	19	22	24	26	28	29	30	31
550			21	23	26	28	29	30	32	34
600			23	25	27	29	30	31	34	36
650			24	26	28	29	31	33	35	37
700			25	27	28	31	33	35	37	40
750			26	28	30	32	34	37	39	42
800			27	29	32	34	36	38	42	45

Weight

H	B									
	700	750	800	900	1000	1100	1200	1300	1400	1500
200	22	23	24	26	28	30	31	33	35	38
250	24	25	26	28	30	32	34	36	38	41
300	25	26	28	30	31	34	36	38	40	44
350	27	29	30	32	34	37	39	41	44	48
400	30	31	32	35	38	40	43	46	48	52
450	31	32	34	37	40	44	47	49	52	57
500	33	34	36	39	45	47	50	53	56	62
550	35	37	38	43	47	50	54	57	60	67
600	37	39	42	46	50	54	57	61	64	71
650	40	42	45	49	53	57	61	64	68	75
700	43	45	48	52	56	60	64	67	71	78
750	45	48	50	55	59	63	66	69	73	81
800	47	50	52	57	62	65	68	71	75	84

Dimensions

FK-EU
with spring return actuator

FK-EU with spring return actuator (FK-EU/.../Z4*)

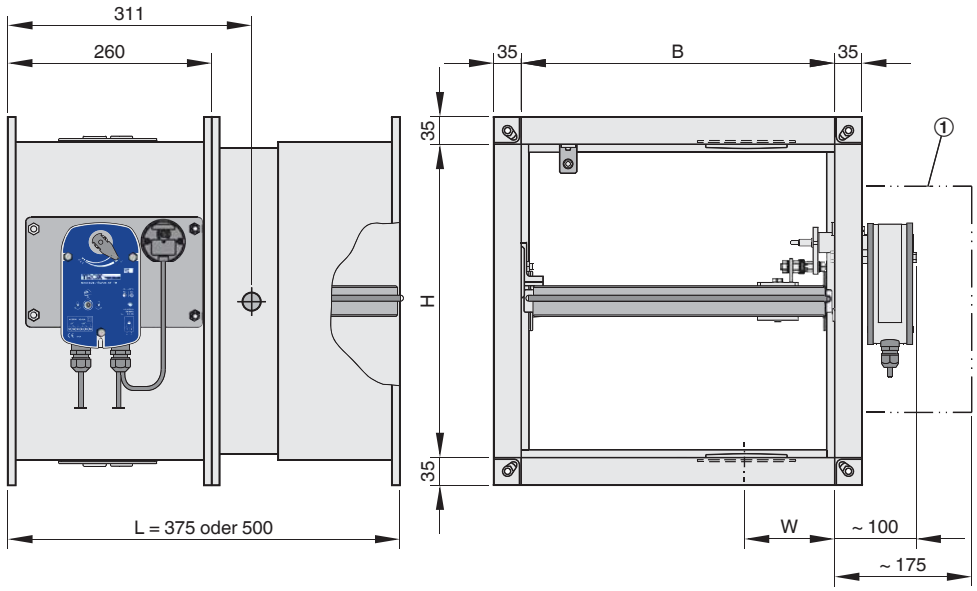

W: 115 mm (B < 250 mm: 94 mm)

1 Keep clear to provide access to the spring return actuator

Weight

H	B									
	200	250	300	350	400	450	500	550	600	650
200	13	14	15	16	18	19	20	21	22	23
250	14	15	16	18	19	20	21	22	24	25
300	15	16	17	19	20	21	22	24	26	27
350	16	18	19	20	21	23	25	26	28	29
400	18	19	20	21	23	25	27	29	30	31
450	19	20	21	23	25	27	29	31	32	32
500	20	21	22	25	27	29	31	32	33	34
550			24	26	29	31	32	33	35	37
600			26	28	30	32	33	34	37	39
650			27	29	31	32	34	36	38	40
700			28	30	31	34	36	38	40	43
750			29	31	33	35	37	40	42	45
800			30	32	35	37	39	41	45	48

Weight

H	B									
	700	750	800	900	1000	1100	1200	1300	1400	1500
200	25	26	27	29	31	33	34	36	38	41
250	27	28	29	31	33	35	37	39	41	44
300	28	29	31	33	34	37	39	41	43	47
350	30	32	33	35	37	40	42	44	47	51
400	33	34	35	38	41	43	46	49	51	55
450	34	35	37	40	43	47	50	52	55	60
500	36	37	39	42	48	50	53	56	59	65
550	38	40	41	46	50	53	57	60	63	70
600	40	42	45	49	53	57	60	64	67	74
650	43	45	48	52	56	60	64	67	71	78
700	46	48	51	55	59	63	67	70	74	81
750	48	51	53	58	62	66	69	72	76	84
800	50	53	55	60	65	68	71	74	78	87

1

Dimensions

FK-EU with spring return actuator (explosion-proof)

FK-EU with explosion-proof actuator (FK-EU/.../ZEX1* and ZEX3*)

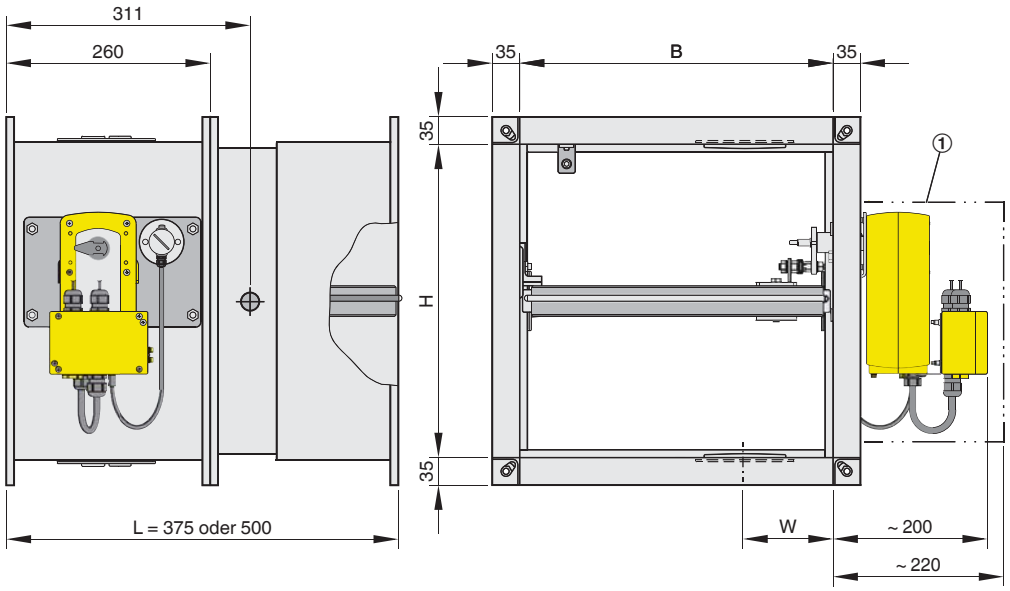

W: 115 mm (B < 250 mm: 94 mm)

① Keep clear to provide access to the spring return actuator

Weight

H	B									
	200	250	300	350	400	450	500	550	600	650
200	15	16	17	18	20	21	22	23	24	25
250	16	17	18	20	21	22	23	24	26	27
300	17	18	19	21	22	23	24	26	28	29
350	18	20	21	22	23	25	27	28	30	31
400	20	21	22	23	25	27	29	31	32	33
450	21	22	23	25	27	29	31	33	34	34
500	22	23	24	27	29	31	33	34	35	36
550			26	28	31	33	34	35	37	39
600			28	30	32	34	35	36	39	41
650			29	31	33	34	36	38	40	42
700			30	32	33	36	38	40	42	45
750			31	33	35	37	39	42	44	47
800			32	34	37	39	41	43	47	50

Weight

H	B									
	700	750	800	900	1000	1100	1200	1300	1400	1500
200	27	28	29	31	33	35	36	38	40	43
250	29	30	31	33	35	37	39	41	43	46
300	30	31	33	35	36	39	41	43	45	49
350	32	34	35	37	39	42	44	46	49	53
400	35	36	37	40	43	45	48	51	53	57
450	36	37	39	42	45	49	52	54	57	62
500	38	39	41	44	50	52	55	58	61	67
550	40	42	43	48	52	55	59	62	65	72
600	42	44	47	51	55	59	62	66	69	76
650	45	47	50	54	58	62	66	69	73	80
700	48	50	53	57	61	65	69	72	76	83
750	50	53	55	60	64	68	71	74	78	86
800	52	55	57	62	67	70	73	76	80	89

1

Dimensions

FK-EU as air transfer damper

FK-EU as air transfer damper (FK-EU/.../Z**RM)

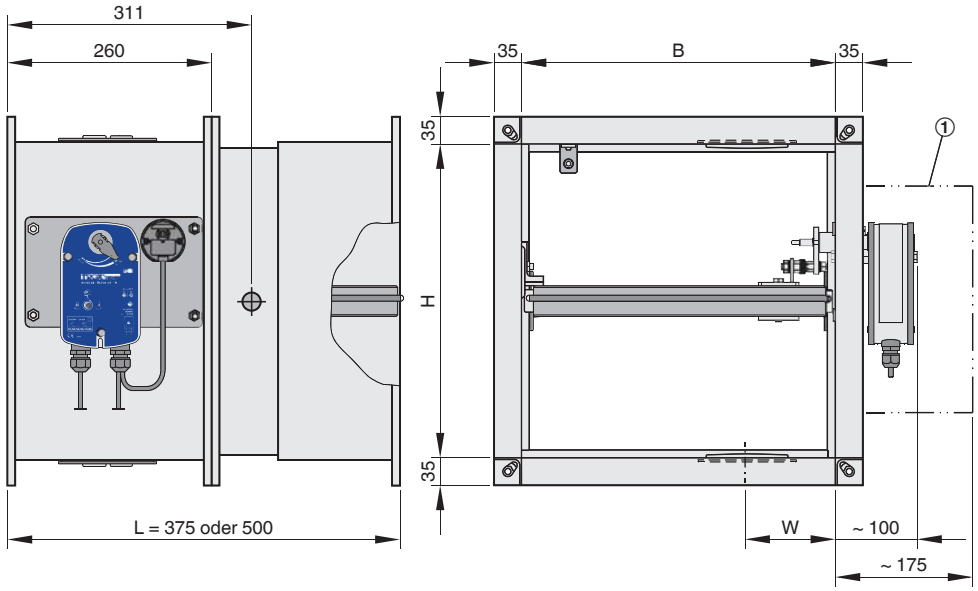

W: 115 mm (B < 250 mm: 94 mm) ① Keep clear to provide access to the duct smoke detector and to the spring return actuator

Weight

H	B									
	200	250	300	350	400	450	500	550	600	650
200	16	17	18	19	21	22	23	24	25	26
250	17	18	19	21	22	23	24	25	27	28
300	18	19	20	22	23	24	25	27	29	30
350	19	21	22	23	24	26	28	29	31	32
400	21	22	23	24	26	28	30	32	33	34
450	22	23	24	26	28	30	32	34	35	35
500	23	24	25	28	30	32	34	35	36	37
550			27	29	32	34	35	36	38	40
600			29	31	33	35	36	37	40	42
650			30	32	34	35	37	39	41	43
700			31	33	34	37	39	41	43	46
750			32	34	36	38	40	43	45	48
800			33	35	38	40	42	44	48	51

Weight

H	B									
	700	750	800	900	1000	1100	1200	1300	1400	1500
200	28	29	30	32	34	36	37	39	41	44
250	30	31	32	34	36	38	40	42	44	47
300	31	32	34	36	37	40	42	44	46	50
350	33	35	36	38	40	43	45	47	50	54
400	36	37	38	41	44	46	49	52	54	58
450	37	38	40	43	46	50	53	55	58	63
500	39	40	42	45	51	53	56	59	62	68
550	41	43	44	49	53	56	60	63	66	73
600	43	45	48	52	56	60	63	67	70	77
650	46	48	51	55	59	63	67	70	74	81
700	49	51	54	58	62	66	70	73	77	84
750	51	54	56	61	65	69	72	75	79	87
800	53	56	58	63	68	71	74	77	81	90

Dimensions

Flange – uneven number of holes

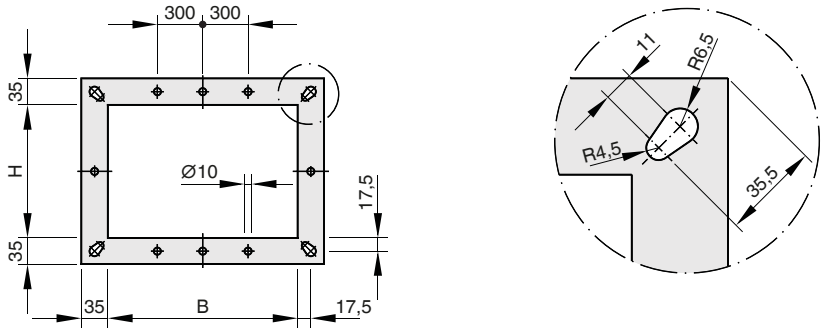

Flange – even number of holes

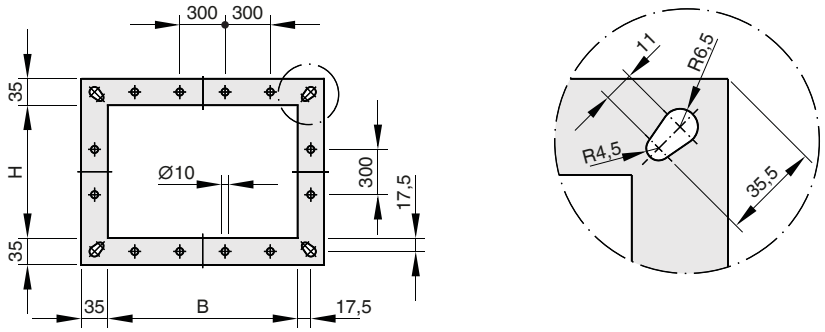

Dimensions [mm]

B or H	200	300	400	500	600	650	750	900	1100	1300	1500
	250	350	450	550		700	800	1000	1200	1400	
No. of holes horizontally (B)*			1	1	1	2	2	3	3	4	4
No. of holes vertically (H)*			1	1	1	2	2				

*** excluding corner holes**

1

Description

This specification text describes the general properties of the product. Texts for variants can be generated with our Easy Product Finder design programme.

Rectangular or square fire dampers for the isolation of duct penetrations between fire compartments.Tested for fire resistance properties to EN 1366-2, with CE marking and declaration of performance according to the Construction Products Regulation. Ready-for-operation unit, which includes a fire-resistant damper blade and a release mechanism. For mortar-based installation and dry mortarless installation into solid walls and ceiling slabs, mortar-based installation into non-load-bearing solid walls with flexible ceiling joint, mortar-based and dry mortarless installation into lightweight partition walls, lightweight partition walls with cladding on both sides, lightweight fire walls and lightweight– shaft walls. For dry mortarless installation on the face of solid walls, adjacent to solid walls, remote from solid walls and remote from solid ceiling slabs. For installation in lightweight partition walls with metal support structure and flexible ceiling joint; for dry mortarless installation in solid walls and ceiling slabs when using a fire batt; in lightweight partition walls with metal support structure and cladding on both sides.
Casing length 375 mm or 500 mm, for the connection to ducts made of non-combustible or combustible materials.
Thermal or thermoelectric release at 72 °C or 95 °C (warm air ventilation systems).
Constructions with spring return actuator for opening and closing the fire damper independent of the nominal size and even while the ventilation system is running, e.g. for a functional test.
Explosion-proof constructions for zones 1, 2, 21 and 22 with limit switch or spring return actuator.
Construction as air transfer damper (general building inspectorate licence Z-6.50-2031) with duct smoke detector, spring return actuator and cover grilles on both ends.
Simple construction for dry mortarless installation with installation kit: WA, WA short, WV, WE, E1, E2, ES, GL100, GM.

Technical data

- Nominal sizes: 200 × 200 to 1500 × 800 mm
- Casing lengths: 375 and 500 mm
- Volume flow rate range:
  Up to 14400 l/s or 51840 m^3/h
- Differential pressure: up to 2000 Pa
- Operating temperature: at least 0 – 50 °C **
- Upstream velocity:
  ≤ 8 m/s with standard construction;
  ≤ 12 m/s * with spring return actuator

Note: Upstream velocity for the explosion-proof actuator ExMax/RedMax-15-BF TR is ≤ 10 m/s
* Data applies to uniform upstream and downstream conditions for the fire damper
** Temperatures may differ for units with attachments

Special characteristics

- Declaration of performance according to Construction Products Regulation
- Classification to EN 13501-3, up to EI 180 (v_e, h_o, i ↔ o) S
- Building inspectorate licence Z-56.4212-991 for fire resistance properties
- Complies with the requirements of EN 15650
- Tested to EN 1366-2 for fire resistance properties
- Hygiene complies with VDI 6022 part 1 (07/2011), VDI 3803 (10/2002), DIN 1946 part 4 (12/2008), and EN 13779 (09/2007)
- Corrosion protection according to EN 15650 in connection with EN 60068-2-52
- Closed blade air leakage to EN 1751, class 2
- Casing air leakage to EN 1751, class C; (B + H) ≤ 700, class B
- Low differential pressure and sound power level
- Any airflow direction
- Integration into the central BMS with TROXNETCOM
- Any airflow direction
- Integration into the central BMS with TROXNETCOM

Materials and surfaces

Casing:
- Galvanised sheet steel
- Galvanised sheet steel, powder-coated RAL 7001
- Stainless steel 1.4301

Damper blade:
- Special insulation material
- Special insulation material with coating

Other components:
- Damper blade shafts and driving linkage made of stainless steel
- Brass or stainless steel bearings
- Seals of polyurethane or elastomer

The construction variants with stainless steel or powder-coated casing meet even more critical requirements for corrosion protection.
Detailed listing on request.

Sizing data

- $\dot{V}$ _____ [m^3/h]
- Δp_{st} _____ [Pa]
- L_{WA} Air-regenerated noise _____ [dB(A)]

1 **Order options**

1 Type
FK-EU Fire damper

2 Construction
No entry: standard construction
☐ **1** Casing powder-coated RAL 7001
☐ **2**[1] Casing made of stainless steel
☐ **7** With coated damper blade
☐ **1 – 7** Casing powder-coated RAL 7001, with coated damper blade
☐ **2 – 7**[1] Casing made of stainless steel, with coated damper blade
☐ **W**[2] With fusible link 95 °C (only for use in warm air ventilation systems)

3 Country of destination
☐ **DE** Germany
Other destination countries upon request

4 Nominal size [mm]
☐ B × H × L

5 Accessories 1
No entry: none
☐ **E1 – GL 100**[3]

6 Accessories 2
No entry: none
☐ **A0 – SS**

7 Attachments
☐ **Z00 – ZEX4**

[1] Not for use with fire batts
[2] W can be combined with all constructions listed under 2, but not with attachments listed under 7 ZEX1 – ZEX4 and Z43RM – Z45RM
[3] GL 100 for wall thickness 100 mm when 50 mm sections are used. Other wall thicknesses and section widths upon request.