Ceiling swirl diffusers
Type FDE

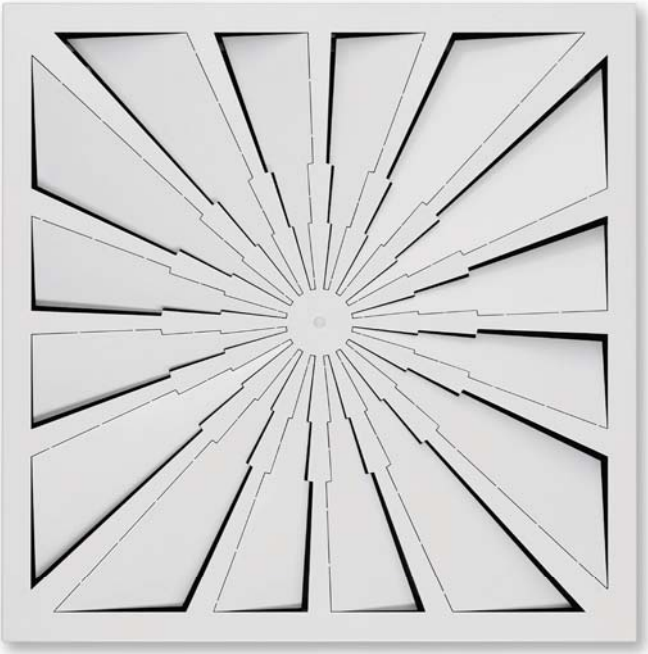

For high volume flow rates, with fixed air control blades

Square ceiling swirl diffusers

- Nominal sizes 600, 625
- Volume flow rate range 51 – 365 l/s or 184 – 1314 m^3/h
- Diffuser face made of galvanised sheet steel, powder-coated
- For supply and extract air
- For variable and constant volume flows
- For all types of ceiling systems
- High induction results in a rapid reduction of the temperature difference and airflow velocity

Optional equipment and accessories

- Exposed diffuser face available in RAL CLASSIC colours
- Plenum box with cord-operated damper blade and pressure tap

Plenum box with damper blade (optional)

Horizontal swirling air discharge

Application

Application
- Type FDE ceiling swirl diffusers are used as supply air or extract air diffusers for comfort zones
- Horizontal swirling supply air discharge for mixed flow ventilation
- The efficient swirl creates high induction levels, thereby rapidly reducing the temperature difference and airflow velocity (supply air variant)
- For variable and constant volume flows
- For supply air to room air temperature differences from –12 to +10 K
- For room heights up to 4.2 m (lower edge of suspended ceiling)
- For all types of ceiling systems

Special characteristics
- For high volume flow rates, with fixed air control blades
- High induction results in a rapid reduction of the supply air to room air temperature difference and airflow velocity
- For all types of ceiling systems
- Horizontal duct connection

Nominal sizes
- 600, 625

Description

Variants
- FDE-Z: Supply air
- FDE-A: Extract air

Parts and characteristics
- Square diffuser face
- Diffuser face with radially arranged fixed air control blades
- Plenum box for supply air, with an optimised equalising element that ensures a uniform airflow through the diffuser face
- Simple installation of the diffuser face due to central fixing screw with decorative cap
- Damper blade for volume flow rate balancing (optional)

Attachments
- M: Damper blade for volume flow rate balancing
- MN: Pressure tap and cord-operated damper blade for volume flow rate balancing with the diffuser face in place

Accessories
- Lip seal

Construction features
- Spigot suitable for circular ducts to EN 1506 or EN 13180
- Spigot with groove for lip seal (if accessory lip seal has been ordered)

Materials and surfaces
- Diffuser face, perforated plate with border, plenum box and cross bar made of galvanised sheet steel
- Lip seal made of rubber
- Perforated plate and border dip coated RAL 9005, jet black
- Diffuser face powder-coated RAL 9010, pure white
- P1: Powder-coated, RAL CLASSIC colour

Standards and guidelines
- Sound power level of the air-regenerated noise measured according to EN ISO 5135

Maintenance
- Maintenance-free as construction and materials are not subject to wear
- Inspection and cleaning to VDI 6022

Functional description

Ceiling swirl diffusers in air conditioning systems create a swirl to supply air to rooms. The resulting airflow induces high levels of room air, thereby rapidly reducing the airflow velocity and the temperature difference between supply air and room air. Ceiling swirl diffusers allow for large volume flow rates. The result is a mixed flow ventilation in comfort zones, with good overall room ventilation, creating only very little turbulence in the occupied zone.
Type FDE ceiling swirl diffusers have fixed blades.

Air discharge is horizontal omni directional. The supply air to room air temperature difference may range from –12 to +10 K.
A damper blade (optional) simplifies volume flow rate balancing for commissioning. Pressure tap and cord-operated damper blade (optional) allow for volume flow rate balancing with the diffuser face in place.
To give rooms an aesthetic, uniform look, Type FDE diffusers may also be used for extract air.

Schematic illustration of FDE

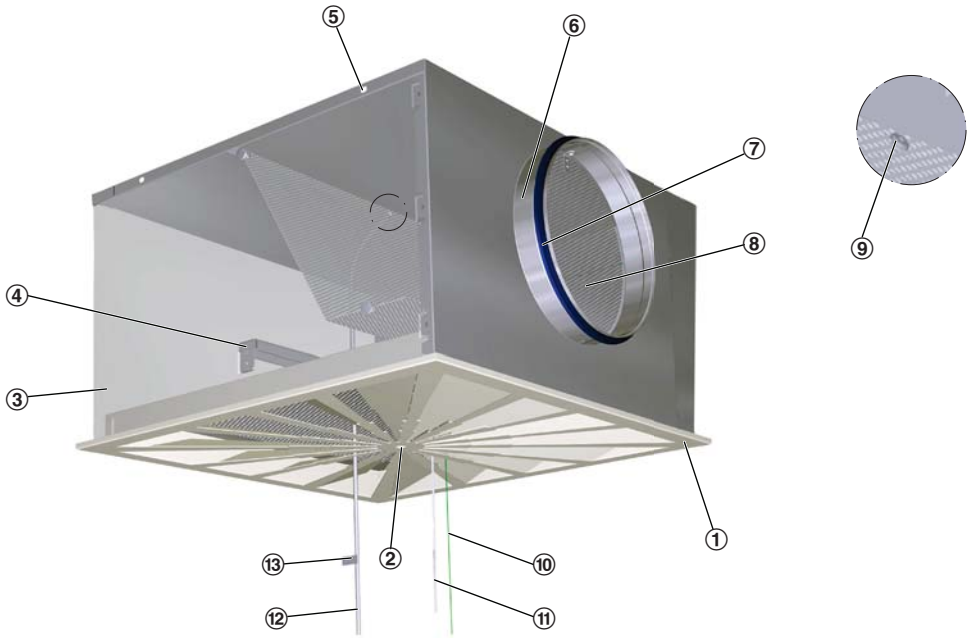

① Diffuser face
② Central fixing screw
③ Plenum box
④ Cross bar
⑤ Suspension hole
⑥ Spigot

Optional
⑦ Lip seal
⑧ Damper blade for volume flow rate balancing
⑨ Pressure tap
⑩ Green cord for closing the damper blade
⑪ White cord for opening the damper blade
⑫ Measuring tube
⑬ Text label indicating plenum box variant

Horizontal omni directional air discharge

Nominal sizes	600, 625 mm
Minimum volume flow rate, at –6 K	51 – 365 l/s or 184 – 1314 m^3/h
Maximum volume flow rate, at approx. 50 dB(A)	330 – 365 l/s or 1188 – 1314 m^3/h
Supply air to room air temperature difference	–12 to +10 K

This specification text describes the general properties of the product. Texts for variants can be generated with our Easy Product Finder design programme.

Ceiling swirl diffusers with square diffuser face. Supply air and extract air variants for comfort zones. Diffuser face with fixed air control blades for horizontal swirling supply air discharge creating high induction levels. For installation into all types of suspended ceilings.
Ready-to-install component which consists of the casing, diffuser face, spigot, and a cross bar to which the diffuser face is fixed.
The diffuser face is fixed to the cross bar with a central screw.
Spigot suitable for ducts to EN 1506 or EN 13180.
Sound power level of the air-regenerated noise measured according to EN ISO 5135.

Special characteristics

- For high volume flow rates, with fixed air control blades
- High induction results in a rapid reduction of the supply air to room air temperature difference and airflow velocity
- For all types of ceiling systems
- Horizontal duct connection

Materials and surfaces

- Diffuser face, perforated plate with border, plenum box and cross bar made of galvanised sheet steel
- Lip seal made of rubber
- Perforated plate and border dip coated RAL 9005, jet black
- Diffuser face powder-coated RAL 9010, pure white
- P1: Powder-coated, RAL CLASSIC colour

Technical data

- Nominal sizes: 600, 625 mm
- Minimum volume flow rate, with –6 K: 51 – 365 l/s or 184 – 1314 m^3/h
- Maximum volume flow rate, with approx. 50 dB(A): 330 – 365 l/s or 1188 – 1314 m^3/h
- Supply air to room air temperature difference: –12 to +10 K

Sizing data

- $\dot{V}$ _____ _____ [m^3/h]
- Δp_t _____ _____ [Pa]

Air-regenerated noise

- L_{WA} _____ _____ [dB(A)]

Square diffuser face with plenum box for horizontal duct connection

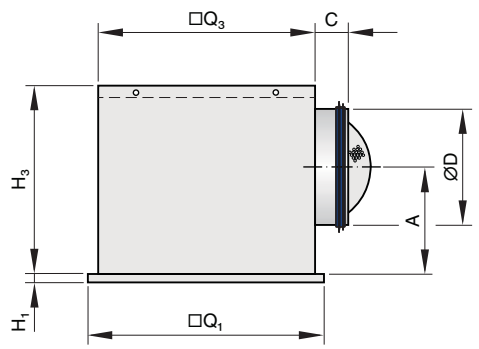

FDE

Nominal size	□Q_1	H_1	□Q_3	H_3	ØD	A	C	Plenum box	m
	mm	mm	mm	mm	mm	mm	mm		kg
600 × 248	598	8	567	345	248	199	48	AK-Uni-004	13.1
600 × 313	598	8	567	410	313	222	50	AK-Uni-011	14.4
625 × 248	623	8	567	345	248	199	48	AK-Uni-004	13.1
625 × 313	623	8	567	410	313	222	50	AK-Uni-011	14.1

Weights apply to the supply air variant

Diffuser face FDE

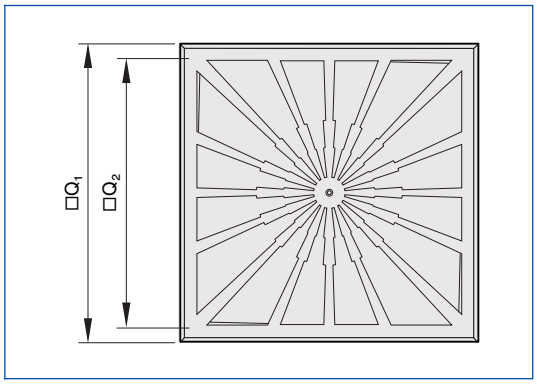

FDE

Nominal size	□Q_1	□Q_2	A_{eff}
	mm	mm	m^2
600 × 248	598	543	0.0447
600 × 313	598	543	0.0447
625 × 248	623	543	0.0447
625 × 313	623	543	0.0447

Installation in T-bar ceilings

Installation in T-bar ceilings, arrangement in a row

Installation and commissioning

- Preferably for rooms with a clear height up to 4.2 m
- Flush ceiling installation
- Horizontal duct connection
- If necessary, carry out volume flow rate balancing with the damper blade

These are only schematic diagrams to illustrate installation details.

Flush ceiling installation with square plenum box

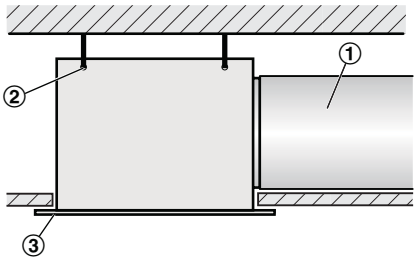

① Duct
② Suspension hole
③ Diffuser face

- Horizontal duct connection
- Four suspension holes
- Suspension with cords, wires or hangers, to be provided by others

Diffuser face – sealing

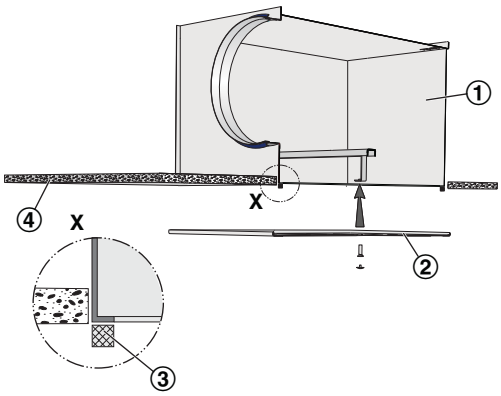

① Plenum box
② Diffuser face
③ Seal
④ Ceiling tile

- The self-adhesive sealing tape (supplied) has to be applied to the return edges of the plenum box by others

Diffuser face – central screw fixing

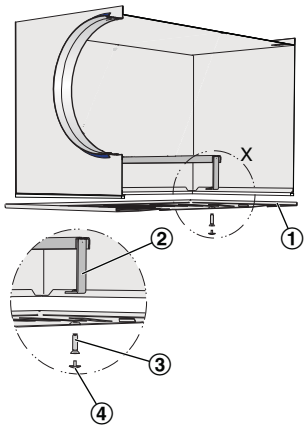

① Diffuser face
② Cross bar
③ Central fixing screw
④ Decorative cap

- Using the central fixing screw, fix the diffuser face to the cross bar of the plenum box
- Attach the decorative cap

Ceiling systems

Installation in continuous ceilings

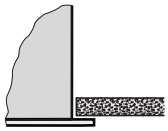

- Fix plenum box (including diffuser face, if necessary) to the ceiling
- Adjust plasterboard ceiling tile as required
- If necessary, fix the diffuser face after the ceiling has been completed

Installation in T-bar ceilings

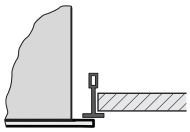

- Fix the plenum box to the ceiling
- The T-bar ceiling is independent of the ceiling diffuser
- Fix the diffuser face below the T-bars after the ceiling has been completed

Volume flow rate balancing

When several diffusers are connected to just one volume flow controller, it may be necessary to balance the volume flow rates.

- Ceiling diffusers with universal plenum box and damper blade (variant -M): The diffuser face can be removed to access the damper blade; the damper blade can then be set to any position between 0 and 90°
- Ceiling diffusers with universal plenum box, damper blade and pressure tap (variant -MN): The diffuser face need not be removed since the damper blade can be set with two cords (white and green).

Volume flow rate measurement

Ceiling diffusers with universal plenum box, damper blade and pressure tap (variant -MN) allow for volume flow rate balancing even with the diffuser face in place.

- Connect the measuring tube to the digital manometer
- Read the effective pressure
- Read the volume flow rate off the characteristic or calculate it
- If necessary, adjust the damper blade position with the cords

A characteristic is included with each AK-Uni plenum box.

AK-Uni-...-MN Volume flow rate balancing

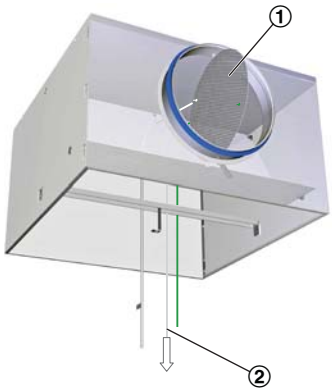

① Damper blade
② White cord for opening the damper blade

Open, 0°

AK-Uni-...-MN Volume flow rate balancing

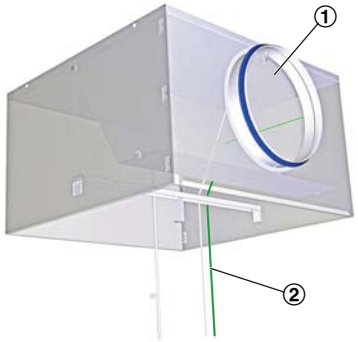

① Damper blade
② Green cord for closing the damper blade

Closed, 90°

AK-Uni-...-MN volume flow rate measurement

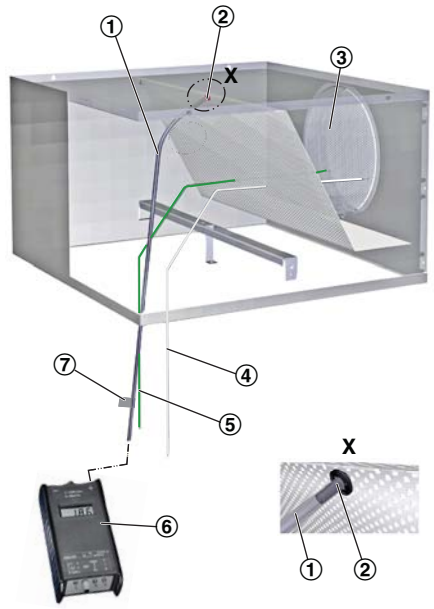

① Measuring tube
② Pressure tap
③ Damper blade for volume flow rate balancing
④ White cord for opening the damper blade
⑤ Green cord for closing the damper blade
⑥ Digital manometer
⑦ Text label indicating plenum box variant

Volume flow rate calculation for air density 1.2 kg/m³

$$\dot{V} = C \times \sqrt{\Delta p_w}$$

Volume flow rate calculation for other air densities

$$\dot{V} = C \times \sqrt{\Delta p_w} \times \sqrt{\frac{1.2}{\rho}}$$